440TAKEYE10BE

AB 440T Prosafe Trapped Key Standard Key Code BE

KEY EXCHANGE INTERLOCKS



Component type	
Range	440T Prosafe Slamlock
Model	N/A
Product status	Existing

Allen-Bradley 440T Slamlock™ Trapped Key Interlock Switches feature trapped keys with tongue actuated interlocks. When the actuator is inserted, the trapped key can be rotated and removed, locking the guard door. In order to safely unlock the guard door, the trapped key must be re-inserted and rotated 90°. Available in mechanical, electrical, and solenoid versions.

Published on 06 November 2026

440TAKEYE10BE

AB 440T Prosafe Trapped Key Standard Key Code BE

KEY EXCHANGE INTERLOCKS

DIMENSIONAL DIAGRAM

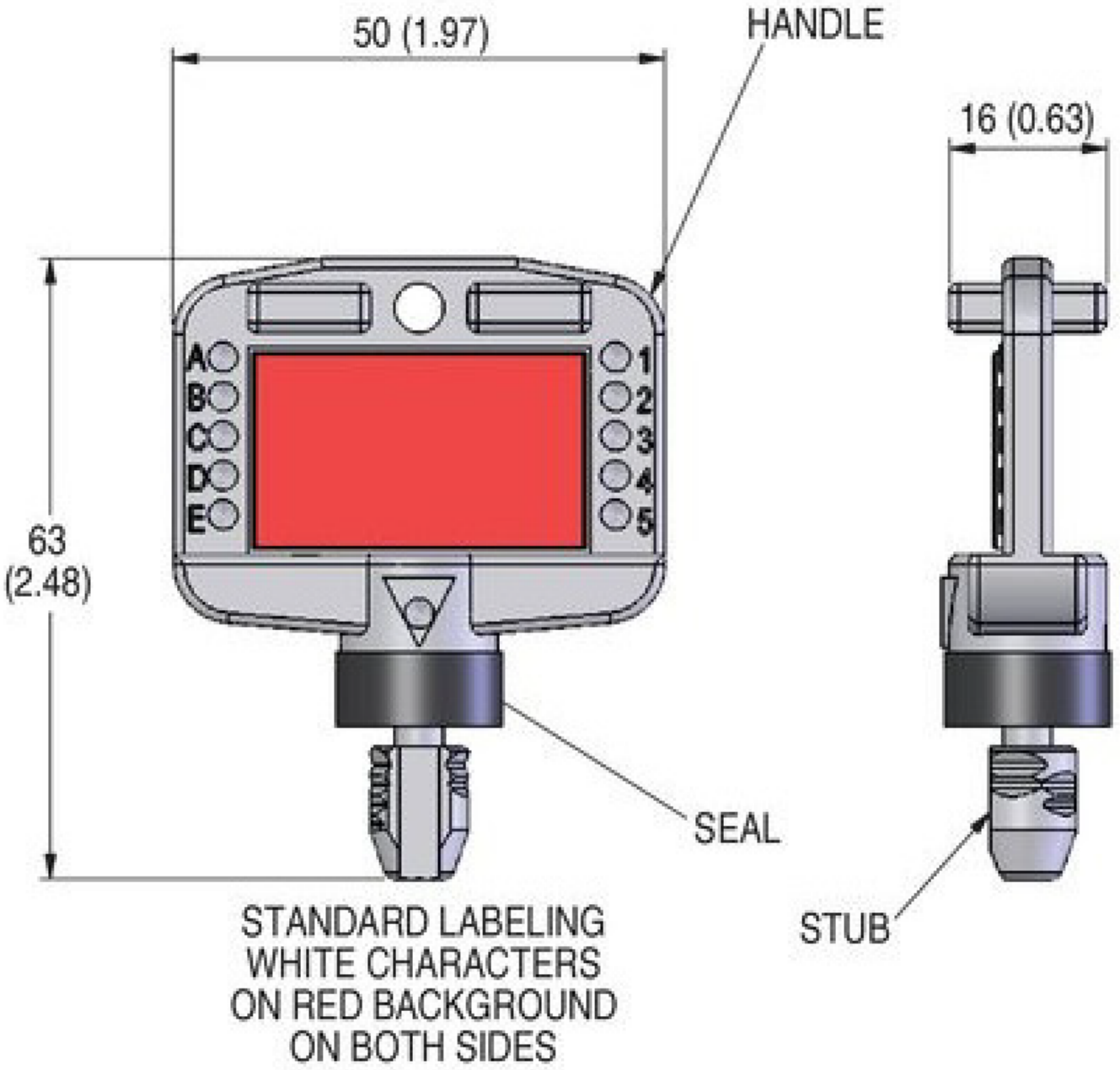

Published on 06 November 2026