3PSS12AR12A

PROCONECT 3PSS Appliance Inlet, 12 PIN, 10A 500V AC

ISOLATING PLUGS

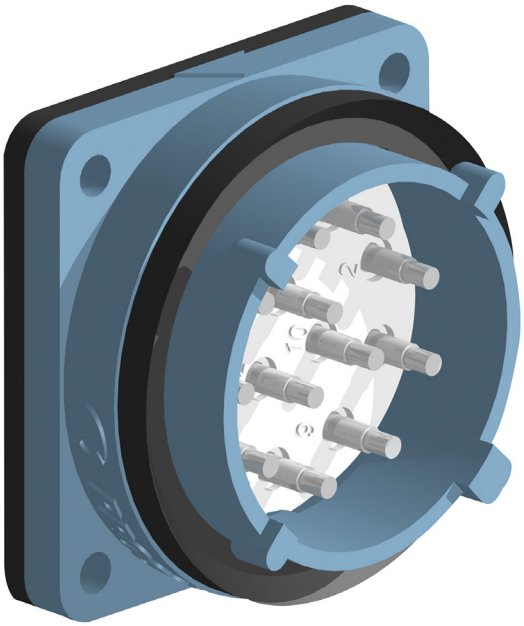

Component type	Round socket/plug for high currents
Range	3PS
Model	N/A
Product status	Existing

Recognised as a leading provider of industrial plugs and sockets for mining, food processing, commercial, rail and marine industries, the 3PS isolating plugs and sockets from Proconect are available in five sizes: 30A, 50A, 90A, 150A and 250A, tested against IEC 60309-1 standard. The isolating plugs and sockets eliminate the need for a switch and ensures power is safely available when required.

ELECTRICAL	**Number of poles**	12
CONSTRUCTION	**Construction type**	Inlet
	Contact material	Other
	IP rating	IP66
	Surface treatment contacts	Silver-plated
DIMENSIONS	**Weight**	0.07 kg
ENVIRONMENT	**Operating temperature**	-30…60 °C

3PSS12AR12A

PROCONECT 3PSS Appliance Inlet, 12 PIN, 10A 500V AC

ISOLATING PLUGS

DIMENSIONAL DIAGRAM

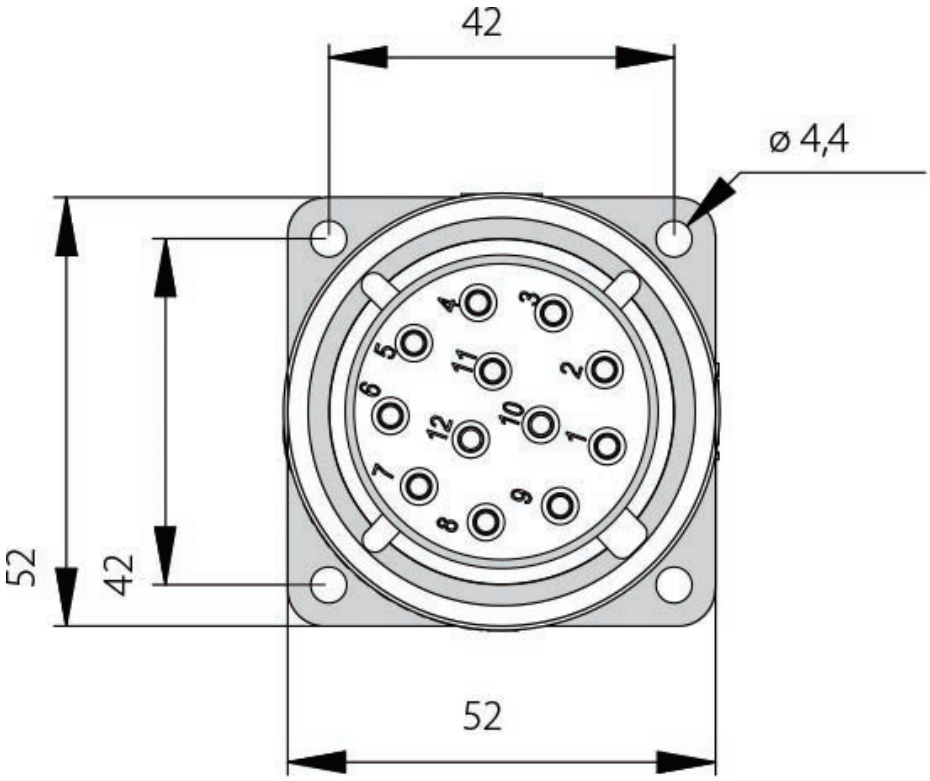

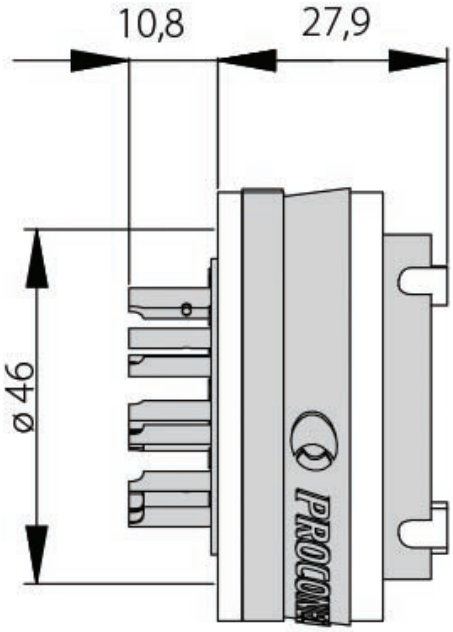

RELATED PRODUCTS

ACCESSORY

Item No: 3PSSGA
Required: No
Description: PROCONECT 3PSS Handle - Angled, suits 7-13mm cable, M20 gland

Item No: 3PSSLB
Required: No
Description: PROCONECT 3PSS Panel Mounting Box

Item No: 3PSSGS
Required: No
Description: PROCONECT 3PSS Handle - Straight, suits 7-13mm cable, M20 gland

Item No: 3PSSW
Required: No
Description: PROCONECT 3PSS Wall Box 30 degrees, suits 7-13mm cable, M20 Gland

Published on 02 September 2026