150SC1NUR

Allen-Bradley SMC 50 Soft Starter Solid State 690V 210A 24VDC Control

SOFT STARTERS



Component type	Soft starter
Range	SMC 50
Model	N/A
Product status	Existing

The Allen-Bradley's SMC-50 soft starters are designed to provide smooth, controlled starting and stopping of motors. Available with a current range from 104A to 480 A with internal bypass and from 90A to 520A in the solid state form. With advanced monitoring and protection functions, superior communication capability, and energy saver mode increases efficiency and reduce downtime.

ELECTRICAL	Rated power three-phase motor, inline, at 400 V	110 kW
	Rated power three-phase motor, inside delta, at 400 V	200 kW
	Rated operating voltage Ue	200-690 V
	Integrated motor overload protection	Yes
	Release class	Adjustable
	Internal bypass	No
	Torque control	Yes
	Voltage type for actuating	DC
	Control supply voltage Us at DC	24 V
	Function	Single direction
CONSTRUCTION	With display	No
	IP rating	IP00
DIMENSIONS	Height	611.6 mm
	Width	273.1 mm
	Depth	272.9 mm
	Weight	47.6 kg
ENVIRONMENT	Rated surrounding temperature without derating	40 °C

Published on 04 August 2026

150SC1NUR

Allen-Bradley SMC 50 Soft Starter Solid State 690V 210A 24VDC Control

SOFT STARTERS

DIMENSIONAL DIAGRAM

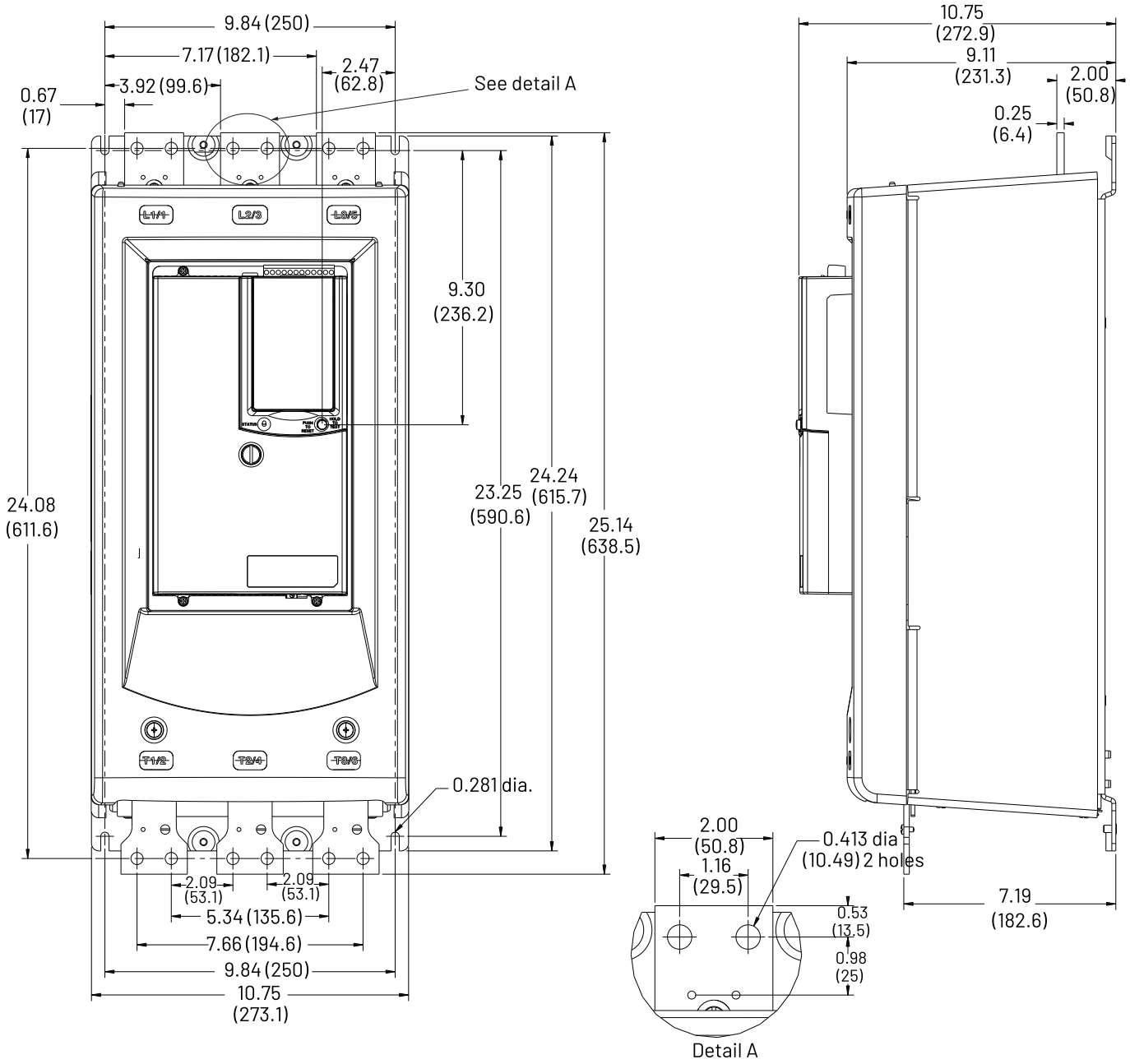

Published on 04 August 2026