1492WTF3

Allen-Bradley 1492-W Screw Connection Terminal 2.5mm 3 Levels 6 Conductor Entries Grey

TERMINALS

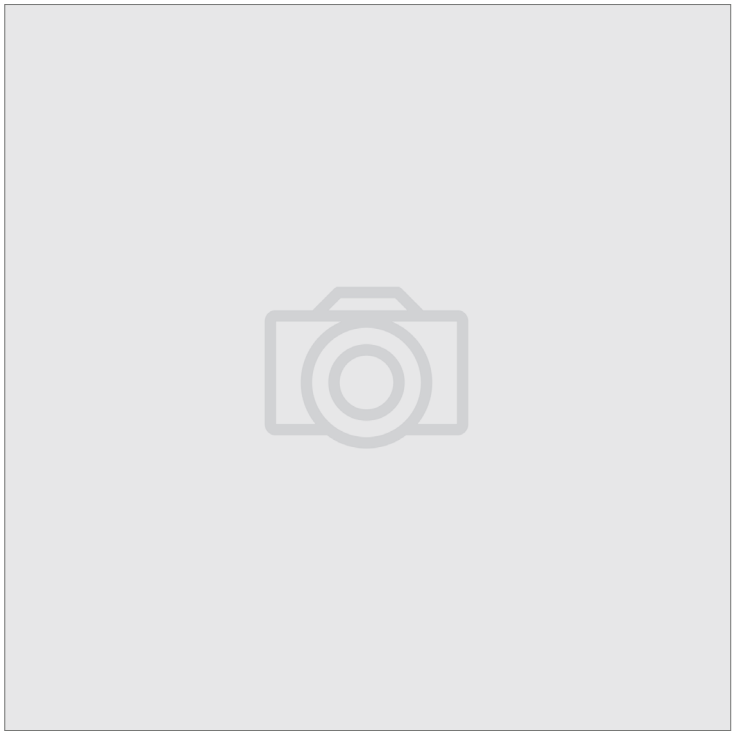

Component type	Feed-through terminal block
Range	1492J/W
Model	N/A
Product status	Existing

The Allen-Bradley 1492-J and W ranges of screw connection terminal blocks are reliable, safe and straight forward electrical connections for wiring management. With cross-sectional wire sizes from 0.5mm2 to 120mm2 and terminal types such as feed-through, disconnect, fused, plug-in and thermocouple. Options include single or multi-level housing and accessories for various panel space requirements.

ELECTRICAL	Type of electrical connection 1	Screw connection
	Type of electrical connection 2	Screw connection
	Rated current In	24 A
	Rated voltage	250 V
CONSTRUCTION	Number of levels	3
	Number of clamp positions per level	2
	Colour	Grey
	Mounting method	DIN rail (top hat rail) 35 mm
MECHANICAL	Nominal tightening torque	0.5 Nm
DIMENSIONS	Wire/conductor size	0.5-2.5 mm
	Width	5.1 mm
	Height	89.9 mm
	Depth	44.1 mm
	Wire strip length	8 mm
ENVIRONMENT	Insulation temperature	-40…90 °C
	Operating temperature	40…90 °C

Published on 07 October 2026

1492WTF3

Allen-Bradley 1492-W Screw Connection Terminal 2.5mm 3 Levels 6 Conductor Entries Grey

TERMINALS

DIMENSIONAL DIAGRAM

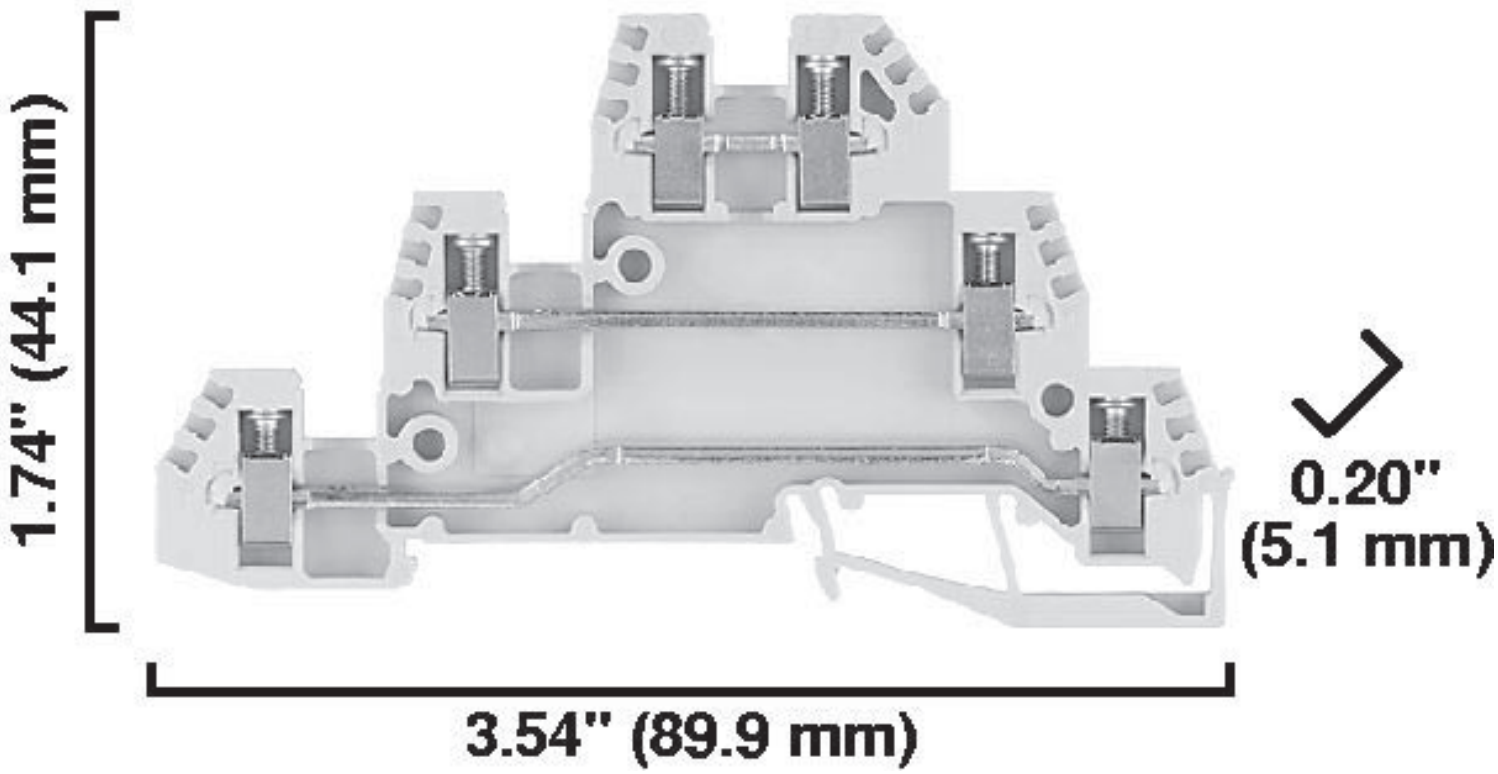

RELATED PRODUCTS

ACCESSORY

Item No: 1492CJT510
Required: No
Description: Allen-Bradley 1492-W Centre Jumper for 1492WTF3 WTS3 10Pole



Item No: 1492CJT52
Required: No
Description: Allen-Bradley 1492-W Centre Jumper for 1492WTF3 WTS3 2Pole

Item No: 1492CJT53
Required: No
Description: Allen-Bradley 1492-W Centre Jumper for 1492WTF3 WTS3 3Pole

Item No: 1492CJT550
Required: No
Description: Allen-Bradley 1492-W Centre Jumper for 1492WTF3 WTS3 50ole



Item No: 1492DR5
Required: No
Description: Allen-Bradley 1492 DIN Rail 35 x 7.5mm Copper Free Aluminium 1m



Item No: 1492DR9
Required: No
Description: Allen-Bradley 1492 DIN Rail 35 x 15mm Zinc Plated Steel 1m

Item No: 1492EWP64
Required: No
Description: Allen-Bradley 1492 Warning Plate

Item No: 1492EWP84
Required: No
Description: Allen-Bradley 1492 Warning Plate

Published on 07 October 2026

1492WTF3

Allen-Bradley 1492-W Screw Connection Terminal 2.5mm 3 Levels 6 Conductor Entries Grey

TERMINALS

RELATED PRODUCTS

ACCESSORY



Item No: 1492N90

Required: No

Description: Allen-Bradley 1492 Screw Driver Hardened 3mm Diameter Blade



Item No: 1492PPTS3

Required: No

Description: Allen-Bradley 1492-W Partition Plate for 1492WTF3 WTS3 Mini

Item No: 1492SJT520B

Required: No

Description: Allen-Bradley 1492 Side Jumper for all 1492WTF3 Variants 20Pole Blue insulated

Item No: 1492SJT520R

Required: No

Description: Allen-Bradley 1492 Side Jumper for all 1492WTF3 Variants 20Pole Red insulated

Item No: 199DR4

Required: No

Description: Allen-Bradley 1492 DIN Mounting Rail Zinc Plated Chromated Steel 35 x 15mm 1m