# 1492J3OR

**Allen-Bradley 1492-J Screw Connection Terminal 2.5mm 1 Level 2 Conductor Entries Orange**

TERMINALS

| | |
|---|---|
| **Component type** | Feed-through terminal block |
| **Range** | 1492J/W |
| **Model** | N/A |
| **Product status** | Existing |

The Allen-Bradley 1492-J and W ranges of screw connection terminal blocks are reliable, safe and straight forward electrical connections for wiring management. With cross-sectional wire sizes from 0.5mm2 to 120mm2 and terminal types such as feed-through, disconnect, fused, plug-in and thermocouple. Options include single or multi-level housing and accessories for various panel space requirements.

| | | |
|---|---|---|
| **ELECTRICAL** | Type of electrical connection 1 | Screw connection |
| | Rated current In | 24 A |
| | Rated voltage | 800 V |
| **CONSTRUCTION** | Number of levels | 1 |
| | Number of clamp positions per level | 2 |
| | Colour | Orange |
| | Mounting method | DIN rail (top hat rail) 35 mm |
| **MECHANICAL** | Nominal tightening torque | 0.8 Nm |
| **DIMENSIONS** | Wire/conductor size | 0.5-2.5 mm |
| | Width | 5.1 mm |
| | Height | 60 mm |
| | Depth | 39.5 mm |
| | Wire strip length | 10 mm |
| **ENVIRONMENT** | Insulation temperature | -50…120 °C |

# 1492J3OR

**Allen-Bradley 1492-J Screw Connection Terminal 2.5mm 1 Level 2 Conductor Entries Orange**

TERMINALS

## DIMENSIONAL DIAGRAM

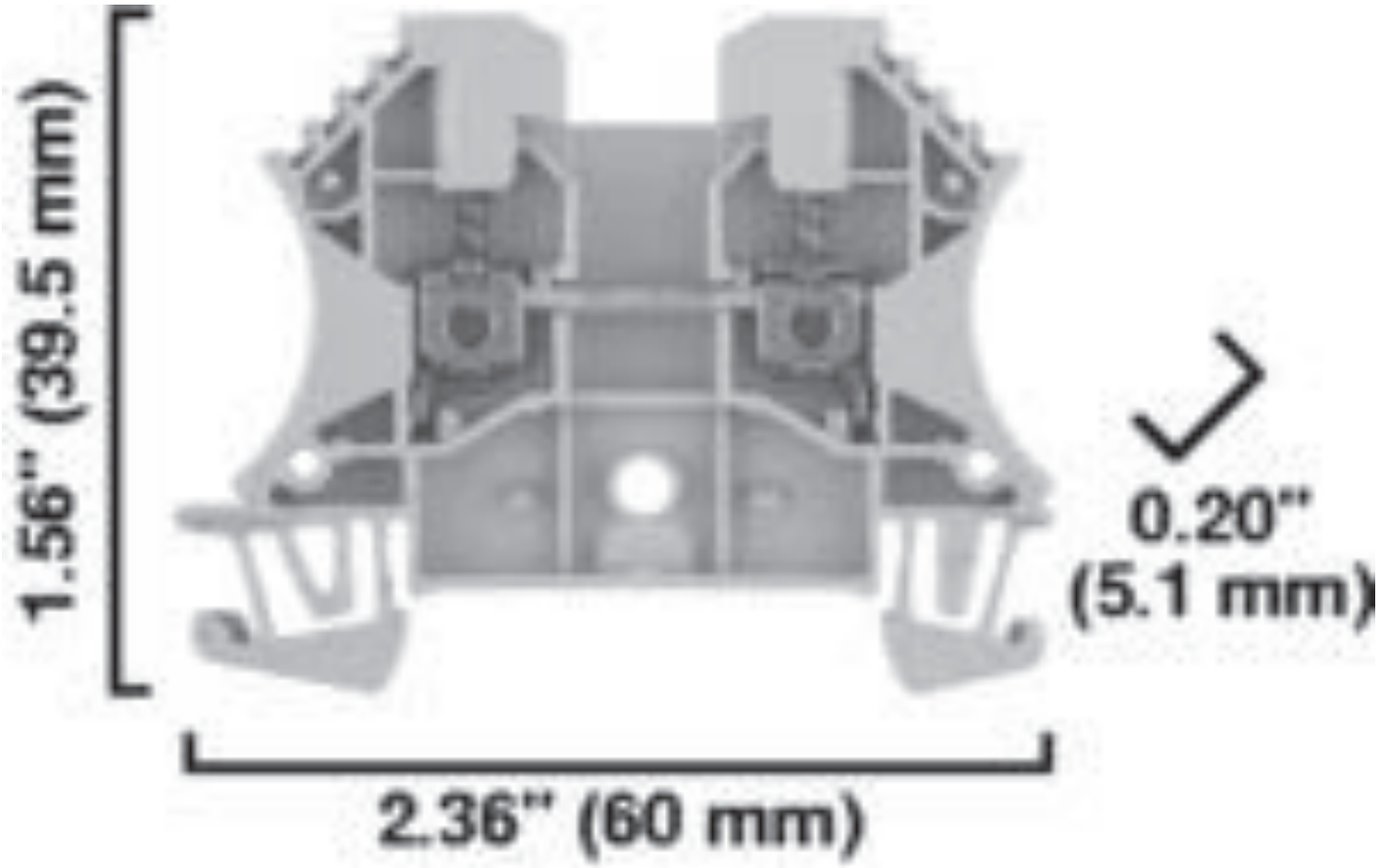




Published on 07 October 2026