100SE370EN12C

Allen-Bradley 100SE Safety Contactor 200kW 3Pole 250 to 500VAC and VDC Elec Coil 1NO 1NC Contact Aux

SAFETY CONTACTORS

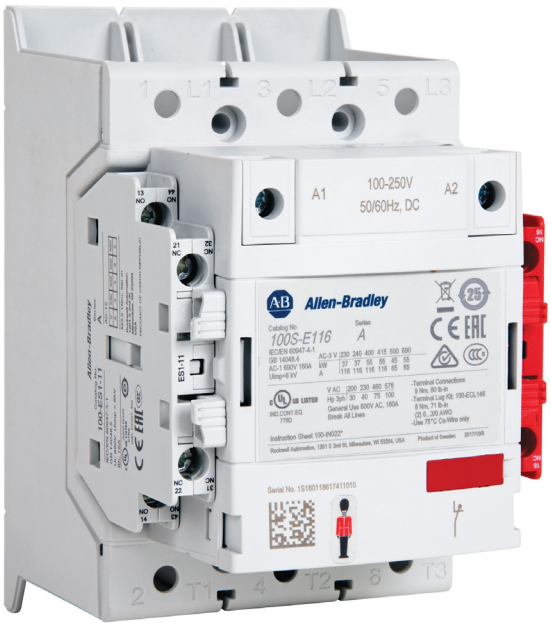

Component type	Power contactor, AC switching
Range	100SE
Model	N/A
Product status	Existing

The Allen-Bradley Bulletin 100S-E safety contactors provide mechanically linked positively guided or mirror contact performance, required in the feedback circuits of modern safety applications.

ELECTRICAL	Number of normally open contacts as main contact	3
	Number of normally closed contacts as main contact	0
	Rated operation current Ie at AC-3, 400 V	370 A
	Rated operation power at AC-3, 400 V	200 kW
	Rated operation current Ie at AC-1, 400 V	600 A
	Max. rated operation voltage Ue AC	1000 V
	Voltage type for actuating	AC/DC
	Rated control supply voltage Us at AC 50HZ	250-500 V
	Rated control supply voltage Us at DC	250-500 V
	Number of auxiliary contacts as normally open contact	1
	Number of auxiliary contacts as normally closed contact	2
	Rated operation current Ie at AC-3, 690 V	315 A
	Rated operation power at AC-3, 690 V	315 kW
	Rated operation current Ie at AC-3, 1000 V	141 A
	Rated operation power at AC-3, 1000 V	200 kW
	Rated operation power at AC-4, 400 V	160 kW
	Rated control supply voltage Us at AC 60HZ	250-500 V
	Power consumption, AC coil pickup	420 VA
	Power consumption, AC coil hold-in	21 VA
	Power consumption, DC coil pickup	600 W
	Power consumption, DC coil hold-in	4.7 W
	Type of electrical connection of main circuit	Bolt connection
	Rated operation current Ie at AC-4, 400 V	280 A
CONSTRUCTION	IP rating	IP00

Published on 06 November 2026

100SE370EN12C

Allen-Bradley 100SE Safety Contactor 200kW 3Pole 250 to 500VAC and VDC Elec Coil 1NO 1NC Contact Aux

SAFETY CONTACTORS

CONSTRUCTION	**Mounting method**	Screw mounting
DIMENSIONS	**Height**	225 mm
	Width	140 mm
	Depth	195.5 mm
	Weight	4.64 kg

DIMENSIONAL DIAGRAM

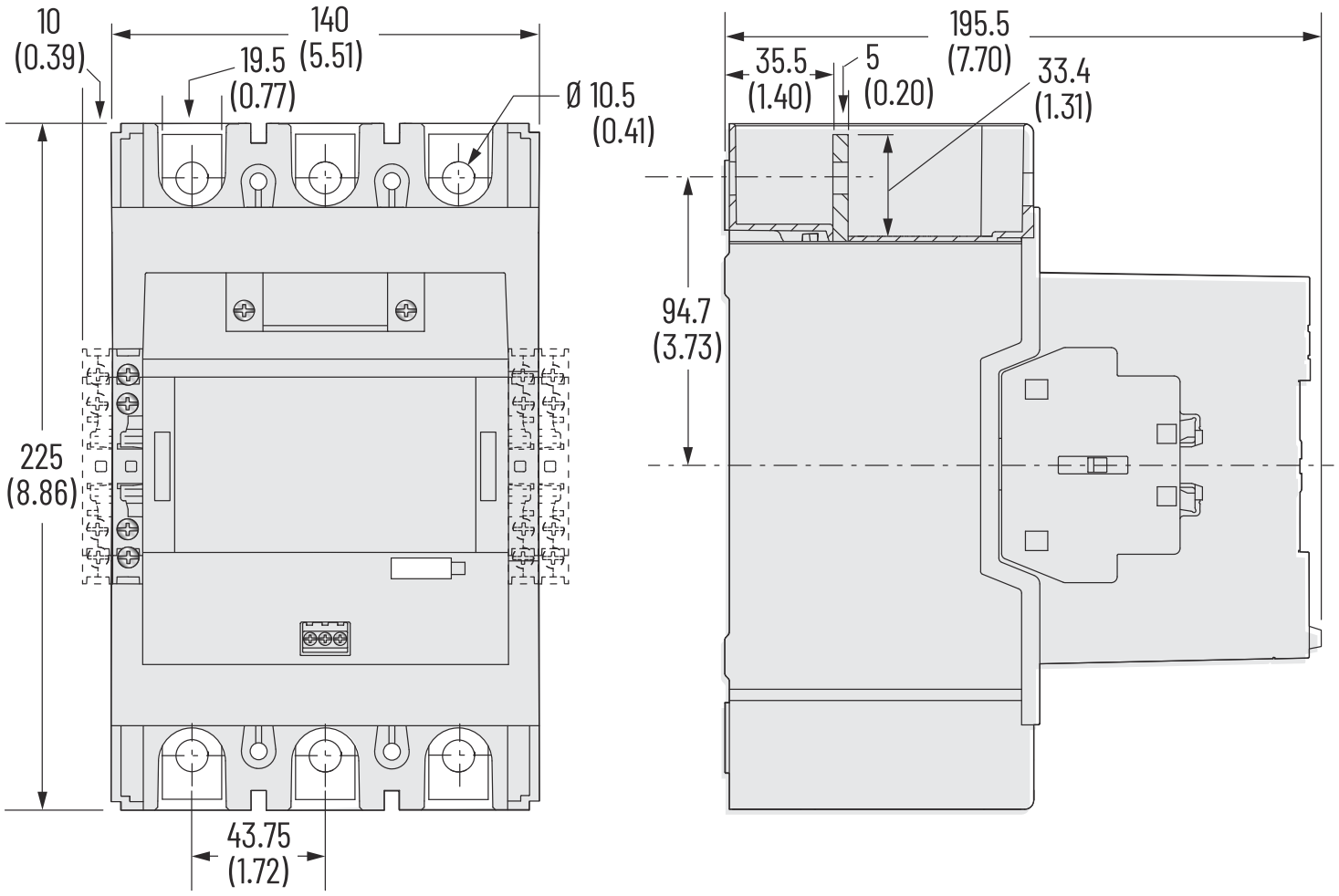

Dimensions are shown in millimeters (inches).

Published on 06 November 2026