# 100SE305KJ12C

**Allen-Bradley 100SE Safety Contactor 160kW 3Pole 24 to 60VAC and VDC Coil 1NO 1NC Contact Auxiliary**

SAFETY CONTACTORS

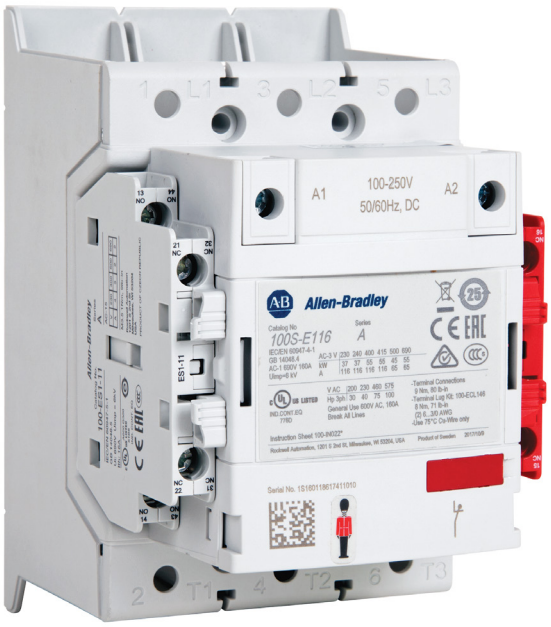


| | |
|---|---|
| **Component type** | Power contactor, AC switching |
| **Range** | 100SE |
| **Model** | N/A |
| **Product status** | Existing |

The Allen-Bradley Bulletin 100S-E safety contactors provide mechanically linked positively guided or mirror contact performance, required in the feedback circuits of modern safety applications.

| | | |
|---|---|---|
| **ELECTRICAL** | Number of normally open contacts as main contact | 3 |
| | Number of normally closed contacts as main contact | 0 |
| | Rated operation current Ie at AC-3, 400 V | 305 A |
| | Rated operation power at AC-3, 400 V | 160 kW |
| | Rated operation current Ie at AC-1, 400 V | 500 A |
| | Max. rated operation voltage Ue AC | 1000 V |
| | Voltage type for actuating | AC/DC |
| | Rated control supply voltage Us at AC 50HZ | 24-60 V |
| | Rated control supply voltage Us at DC | 24-60 V |
| | Number of auxiliary contacts as normally open contact | 1 |
| | Number of auxiliary contacts as normally closed contact | 2 |
| | Rated operation current Ie at AC-3, 690 V | 290 A |
| | Rated operation power at AC-3, 690 V | 250 kW |
| | Rated operation current Ie at AC-3, 1000 V | 131 A |
| | Rated operation power at AC-3, 1000 V | 185 kW |
| | Rated operation power at AC-4, 400 V | 132 kW |
| | Rated control supply voltage Us at AC 60HZ | 24-60 V |
| | Power consumption, AC coil pickup | 475 VA |
| | Power consumption, AC coil hold-in | 8.5 VA |
| | Power consumption, DC coil pickup | 400 W |
| | Power consumption, DC coil hold-in | 3.5 W |
| | Type of electrical connection of main circuit | Bolt connection |
| | Rated operation current Ie at AC-4, 400 V | 230 A |
| **CONSTRUCTION** | IP rating | IP00 |



Published on 06 November 2026

# 100SE305KJ12C

**Allen-Bradley 100SE Safety Contactor 160kW 3Pole 24 to 60VAC and VDC Coil 1NO 1NC Contact Auxiliary**

SAFETY CONTACTORS

| | | |
|---|---|---|
| **CONSTRUCTION** | **Mounting method** | Screw mounting |
| **DIMENSIONS** | **Height** | 225 mm |
| | **Width** | 140 mm |
| | **Depth** | 180 mm |
| | **Weight** | 4.64 kg |

## DIMENSIONAL DIAGRAM

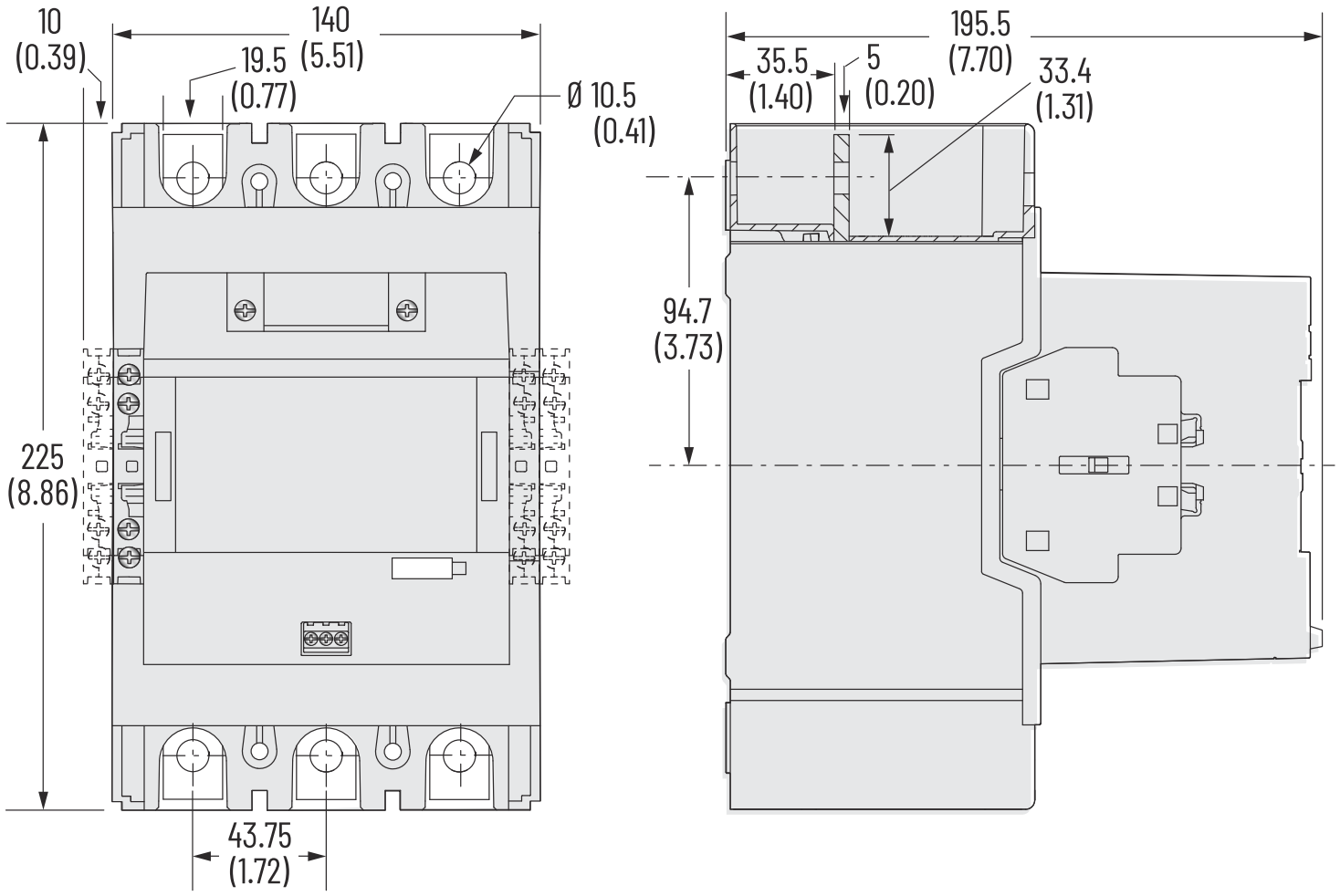


Dimensions are shown in millimeters (inches).



Published on 06 November 2026