DUA52C724

Carlo Gavazzi Monitoring Relay 1 Phase Over/Under Voltage 8-28V DC Own Supply 1 Contact

MONITORING RELAYS

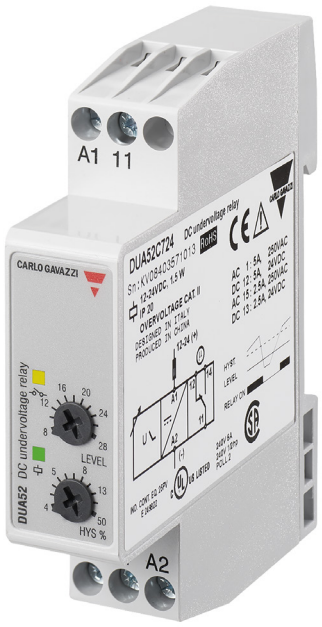

Component type	Voltage monitoring relay
Range	V/I/PH/PF Monitoring
Model	N/A
Product status	Discontinued

The Carlo Gavazzi range of monitoring relays are designed for the detection of phase loss and incorrect phase sequence to over/under current and voltage. Suitable for use in a wide range of applications that require protection against people, fire, earth current leakage, or incorrect mains or cable connections. Installation is easy with front dials and DIP switches.

ELECTRICAL	Type of voltage measuring range	DC
	Voltage measuring range 1	8-28 V
	Contains function DC-under voltage	Yes
	Contains function DC-voltage hysteresis	Yes
	Number of contacts as change-over contact	1
	Rated operation current Ie	5 A
	Rated operation current Ie at AC-15, 230 V	2.5 A
	Rated operation current Ie at DC-12, 24 V	5 A
	Rated operation current Ie at DC-13, 24 V	2.5 A
	Voltage type for actuating	DC
	Rated control supply voltage Us at DC	8-28 V
	Over voltage category	III
	Type of electric connection	Screw connection
CONSTRUCTION	Material contact	Silver tin-oxide
	Suitable for DIN rail mounting	Yes
	IP rating	IP20
DIMENSIONS	Height	81 mm
	Width	17.5 mm
	Depth	67.2 mm
	Weight	0.07 kg
ENVIRONMENT	Storage temperature	-30…80 °C

Published on 22 May 2026

DUA52C724

Carlo Gavazzi Monitoring Relay 1 Phase Over/Under Voltage 8-28V DC Own Supply 1 Contact

MONITORING RELAYS

DIMENSIONAL DIAGRAM

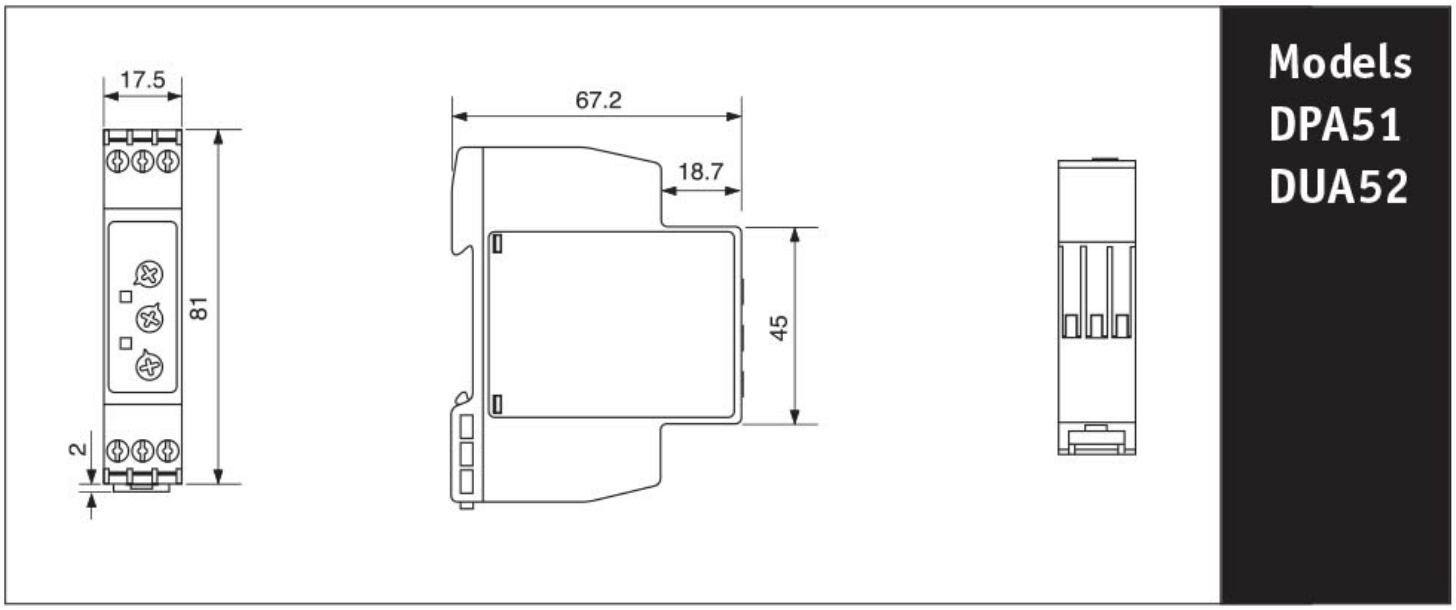

Published on 22 May 2026