CT7N23A63

S+S CT7N Thermal Overload Relay 0.45 to 0.63A Direct Mount Manual or Auto Reset for CA7 9 to 23A

MOTOR PROTECTION

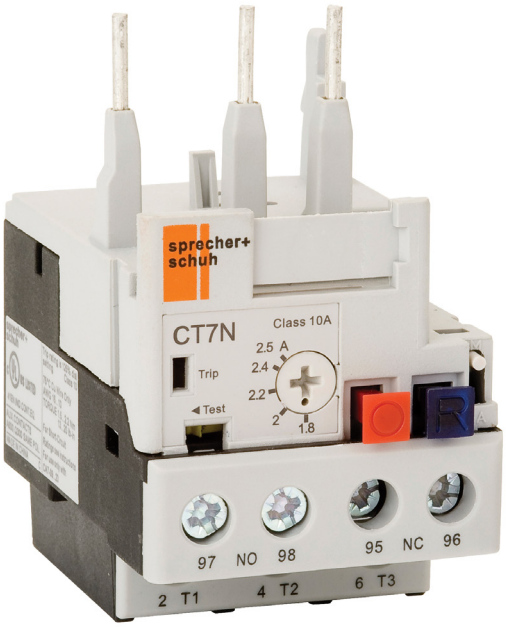

Component type	Thermal overload relay
Range	CT7N
Model	N/A
Product status	Existing

The Sprecher + Schuh CT7N Motor Overload are motor protectors for IEC applications. Designed for use with CA7 Contactors and CA7 Reversing Contactors and feature adjustable trip settings, manual reset button, and a differential mechanism for sensitivity to phase-loss conditions.

ELECTRICAL	**Adjustable current range**	0.45-0.63 A
	Release class	CLASS 10 A
	Max. rated operation voltage Ue	690 V
	Number of auxiliary contacts as normally closed contact	1
	Number of auxiliary contacts as normally open contact	1
	Reset function automatic	Yes
	Reset function push-button	Yes
	Type of electrical connection of main circuit	Screw connection
CONSTRUCTION	**Mounting method**	Direct attachment
DIMENSIONS	**Height**	75.5 mm
	Width	45 mm
	Depth	63.5 mm
	Weight	0.12 kg

Published on 30 May 2026

CT7N23A63

S+S CT7N Thermal Overload Relay 0.45 to 0.63A Direct Mount Manual or Auto Reset for CA7 9 to 23A

MOTOR PROTECTION

DIMENSIONAL DIAGRAM

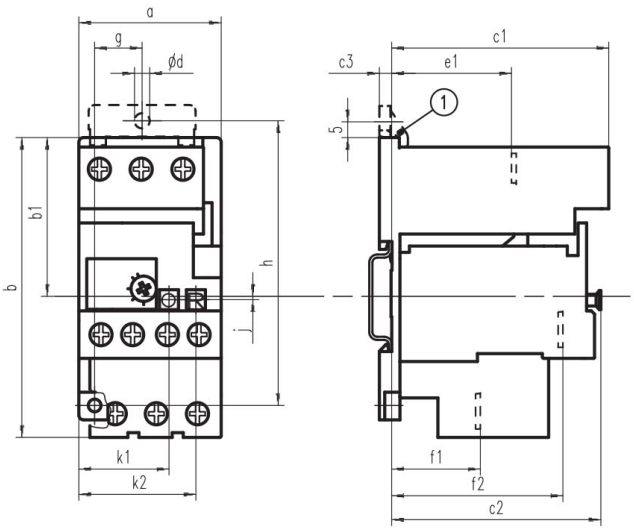

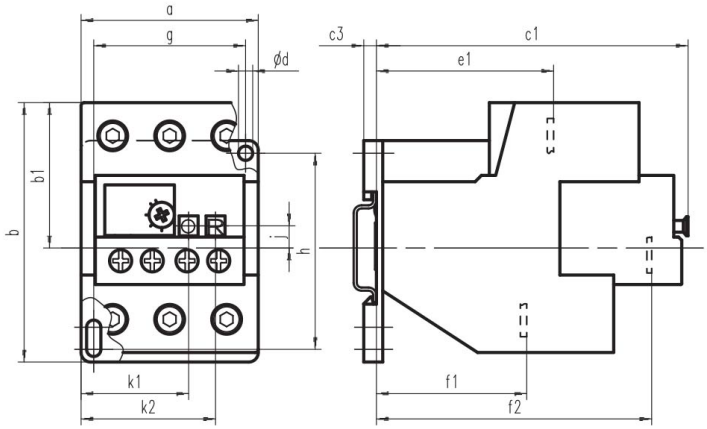

Overload + DIN Rail/ Panel Mounting Adapter	a	b	b1	c1	c2	c3	ød	e1	f1	f2	g	h	k1	k2
CT7N-23-A16...C25 + CT7N-37-P-A CT7N-37-C20...C25 + CT7N-37-P-A	45	89.5	50	68.5	66	4	4.5	38	26	54	15	90	29	37.5
CT7N-37-C30...C38 + CT7N-37-P-A	45	91.5	50	68.5	66	4	4.5	38	28	54	15	90	29	37.5
CT7N-85-C47P...C90P +	56	82	46	99.5	~	4	4.5	56	47.5	87	~	60	41.5	50

RELATED PRODUCTS

ACCESSORY

Item No: CA7FMC
Required: No
Description: S+S CA7 Tag Label Cover

Item No: CA7FMS
Required: No
Description: S+S CA7 Tag Marking Sheet 105 Stickers

Item No: CA7FMP
Required: No
Description: S+S CA7 Tag Lable Sheet 160 Labels

Item No: CMR7N110VAC
Required: No
Description: S+S CT7N Reset Magnet 110VAC suits CT7NCT8

RELATED PRODUCTS

ACCESSORY

Item No: CMR7N12VDC
Required: No
Description: S+S CT7N Reset Magnet 12VDC suits CT7NCT8

Item No: CMR7N240VAC
Required: No
Description: S+S CT7N Reset Magnet 240VAC suits CT7NCT8

Item No: CMR7N24VAC
Required: No
Description: S+S CT7N Reset Magnet 24VAC suits CT7NCT8

Item No: CMR7N24VDC
Required: No
Description: S+S CT7N Reset Magnet 24VDC suits CT7NCT8

Item No: CMR7N48VDC
Required: No
Description: S+S CT7N Reset Magnet 48VDC suits CT7NCT8

Item No: CT7N37PA
Required: No
Description: S+S CT7N Separate Mount Bracket for CT7N23 and CTN37

Item No: CT7NRA3
Required: No
Description: Sprecher + Schuh CT7N Adaptor External Reset for use with CT7N and CT8

Item No: D7AD2CE186
Required: No
Description: Sprecher and Schuh D7 Diffuser For Flush IllumPushButton Reset

Item No: D7AD3CE186
Required: No
Description: Sprecher and Schuh D7 Diffuser for Pilot Light Reset

Item No: D7AD4CE186
Required: No
Description: Sprecher and Schuh D7 Diffuser for Extended Illuminated Pushbutton Reset

Item No: D7AF2CE186
Required: No
Description: Sprecher and Schuh D7 Colour Cap For Flush Non Illuminated Pushbutton 22.5mm Black Reset

Item No: D7AF6CE186
Required: No
Description: Sprecher and Schuh D7 Colour Cap for Flush and Guarded Non illuminated Pushbutton 22.5mm Blue Reset

Item No: D7ATR01
Required: No
Description: Sprecher and Schuh D7 Reset Rod 315 mm Adjustable 34 to 52mm Pusher 10 mm

Item No: D7ATR02
Required: No
Description: Sprecher and Schuh D7 Reset Rod 55 mm Adjustable 50-67 mm Pusher 10 mm

Item No: D7ATR04
Required: No
Description: Sprecher and Schuh D7 Reset Rod 85 mm Adjustable 80-98 mm Pusher 10 mm

Item No: D7ATR06
Required: No
Description: Sprecher and Schuh D7 Reset Rod 115 mm Adjustable 110-128 mm Pusher 10 mm

Item No: D7ATR08
Required: No
Description: Sprecher and Schuh D7 Reset Rod 145 mm Adjustable 141-195 mm Pusher 10 mm

RELATED PRODUCTS

ACCESSORY

Item No: D7ATR19

Required: No

Description: Sprecher and Schuh D7 Reset Rod 315 mm Adjustable 157-326 mm Pusher 10 mm

Item No: D7MF607MX10

Required: No

Description: Sprecher and Schuh D7 Pushbutton 22.5 mm Complete Metal MOM Flush Blue Cap RESET Non Illuminated 1NO

Item No: D7MR2

Required: No

Description: Sprecher and Schuh D7 Pushbutton 22.5mm Metal Reset Rod Operator Blank Black

Item No: D7MR3

Required: No

Description: Sprecher and Schuh D7 Pushbutton 22.5mm Metal Reset Rod Operator Blank Green

Item No: D7MR4

Required: No

Description: Sprecher and Schuh D7 Pushbutton 22.5mm Metal Reset Rod Operator Blank Red

Item No: D7MR6

Required: No

Description: Sprecher and Schuh D7 Pushbuttton 22.5 mm Metal Flush Head Reset Operator Blue

Item No: D7MR607

Required: No

Description: Sprecher and Schuh D7 Pushbutton 22.5mm Metal Reset Rod Operator Reset Blue

Item No: D7MR611

Required: No

Description: Sprecher and Schuh D7 Pushbuttton 22.5mm Metal Flush Head Reset Operator Blue R

Item No: D7PF607PX10

Required: No

Description: Sprecher and Schuh D7 Pushbutton 22.5 mm Complete Plastic MOM Flush Blue Cap RESET Non Ill 1NO

Item No: D7PR2

Required: No

Description: Sprecher and Schuh D7 Pushbutton 22.5 mm Plastic Reset Rod Operator Blank Black

Item No: D7PR3

Required: No

Description: Sprecher and Schuh D7 Pushbutton 22.5mm Plastic Reset Rod Operator Blank Green

Item No: D7PR4

Required: No

Description: Sprecher and Schuh D7 Pushbutton 22.5mm Plastic Reset Rod Operator Blank Red

Item No: D7PR6

Required: No

Description: Sprecher and Schuh D7 Pushbutton 22.5 mm Plastic Reset Rod Operator Blank Blue

Item No: D7PR607

Required: No

Description: Sprecher and Schuh D7 Pushbutton 22.5mm Plastic Reset Rod Operator Reset Blue

Item No: D7PR611

Required: No

Description: Sprecher and Schuh D7 PushButton 22.5 mm Plastic Flush Head Round Blue R

Item No: KT745AS

Required: No

Description: S+S KT7 Screw Fixing Adapter