DUB01CD48500V

Carlo Gavazzi Monitoring Relay 1 Phase Over/Under Voltage 2-500V AC DC and 24-48V AC DC

MONITORING RELAYS

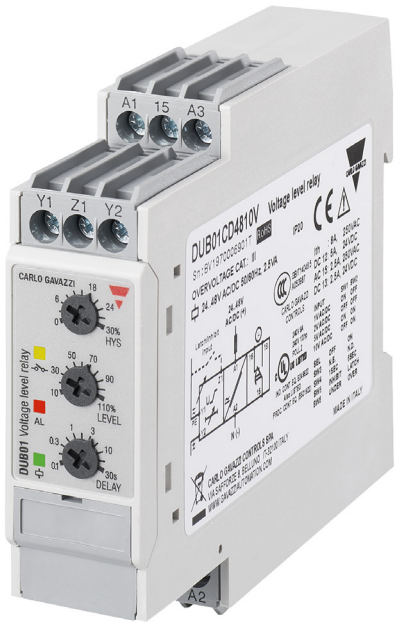

Component type	Voltage monitoring relay
Range	V/I/PH/PF Monitoring
Model	N/A
Product status	Discontinued

The Carlo Gavazzi range of monitoring relays are designed for the detection of phase loss and incorrect phase sequence to over/under current and voltage. Suitable for use in a wide range of applications that require protection against people, fire, earth current leakage, or incorrect mains or cable connections. Installation is easy with front dials and DIP switches.

ELECTRICAL

Type of voltage measuring range	AC/DC
Voltage measuring range 1	2-20 V
Voltage measuring range 2	5-50 V
Voltage measuring range 3	20-200 V
Voltage measuring range 4	50-500 V
Rated frequency	45-65 Hz
Single-phase under voltage possible	Yes
Single-phase over voltage possible	Yes
Contains function DC-over voltage	Yes
Contains function DC-voltage hysteresis	Yes
Number of contacts as change-over contact	1
Rated operation current Ie	8 A
Rated operation current Ie at AC-15, 230 V	2.5 A
Rated operation current Ie at DC-12, 24 V	5 A
Rated operation current Ie at DC-13, 24 V	2.5 A
Voltage type for actuating	AC
Rated control supply voltage Us at AC 50HZ	24-48 V
Rated control supply voltage Us at DC	24-48 V
Rated control supply voltage Us at AC 60HZ	24-48 V
Over voltage category	III
Type of electric connection	Screw connection
Min. adjustable delay-on energization time	1 s
Max. permitted delay-on energization time	6 s

CONSTRUCTION

Material contact	Silver tin-oxide
Suitable for DIN rail mounting	Yes
IP rating	IP20

Published on 03 November 2026

DUB01CD48500V

Carlo Gavazzi Monitoring Relay 1 Phase Over/Under Voltage 2-500V AC DC and 24-48V AC DC

MONITORING RELAYS

DIMENSIONS	Height	83.5 mm
	Width	22.5 mm
	Depth	99.5 mm
	Weight	0.15 kg
ENVIRONMENT	Storage temperature	-30…80 °C

DIMENSIONAL DIAGRAM

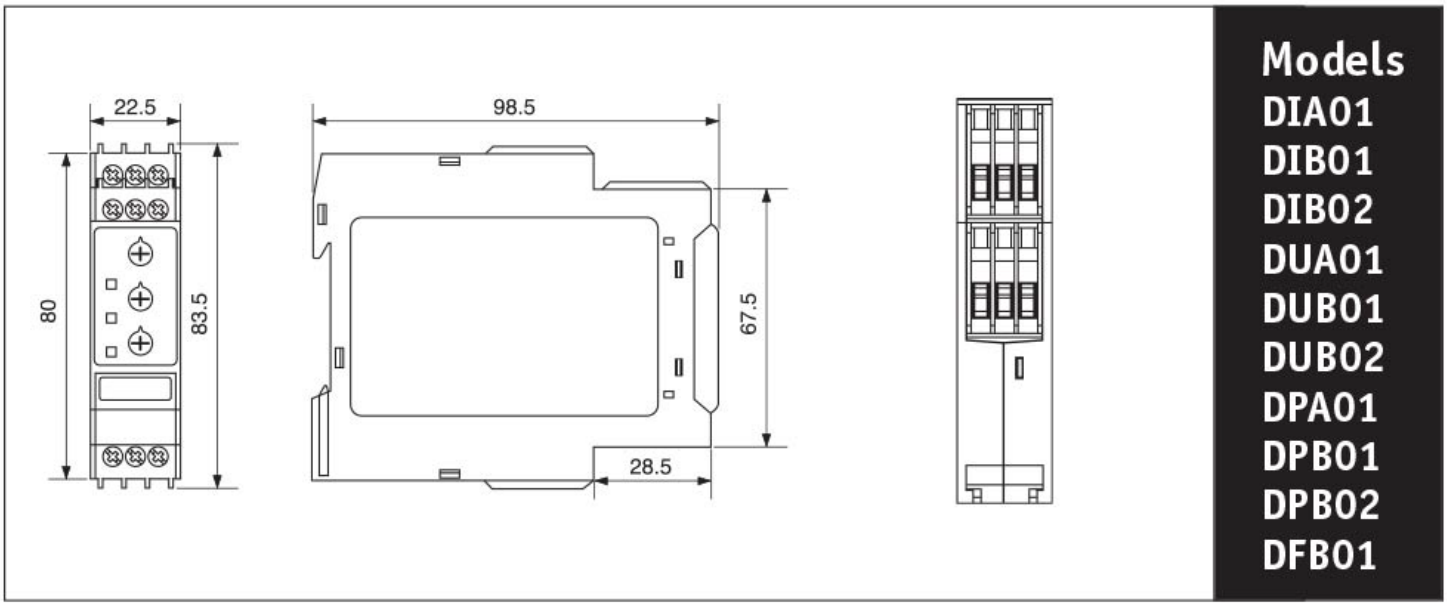

Published on 03 November 2026