Power Distribution and Protection

Circuit Protection

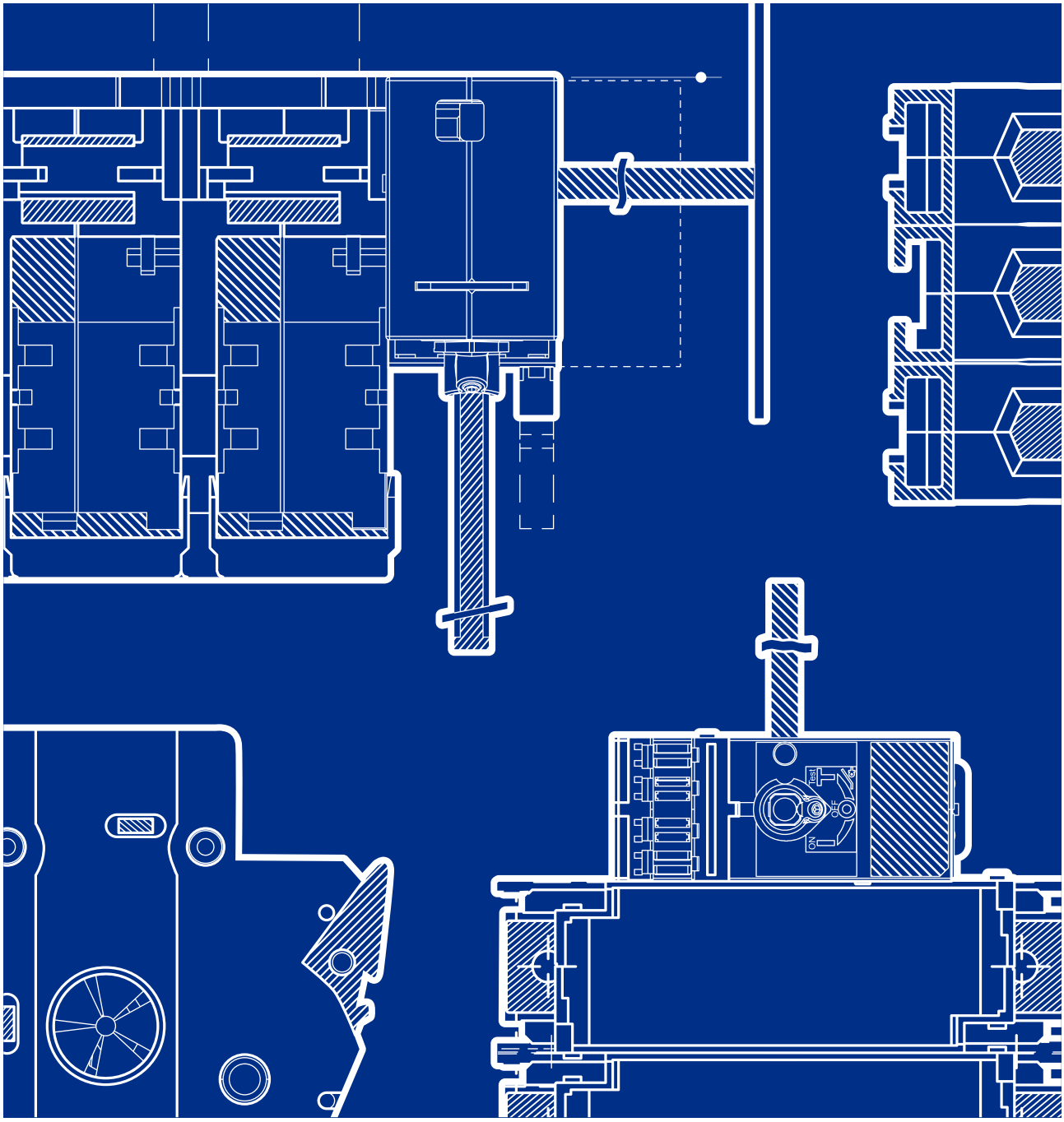

Fuses and Bases

Technical Catalogue 2022

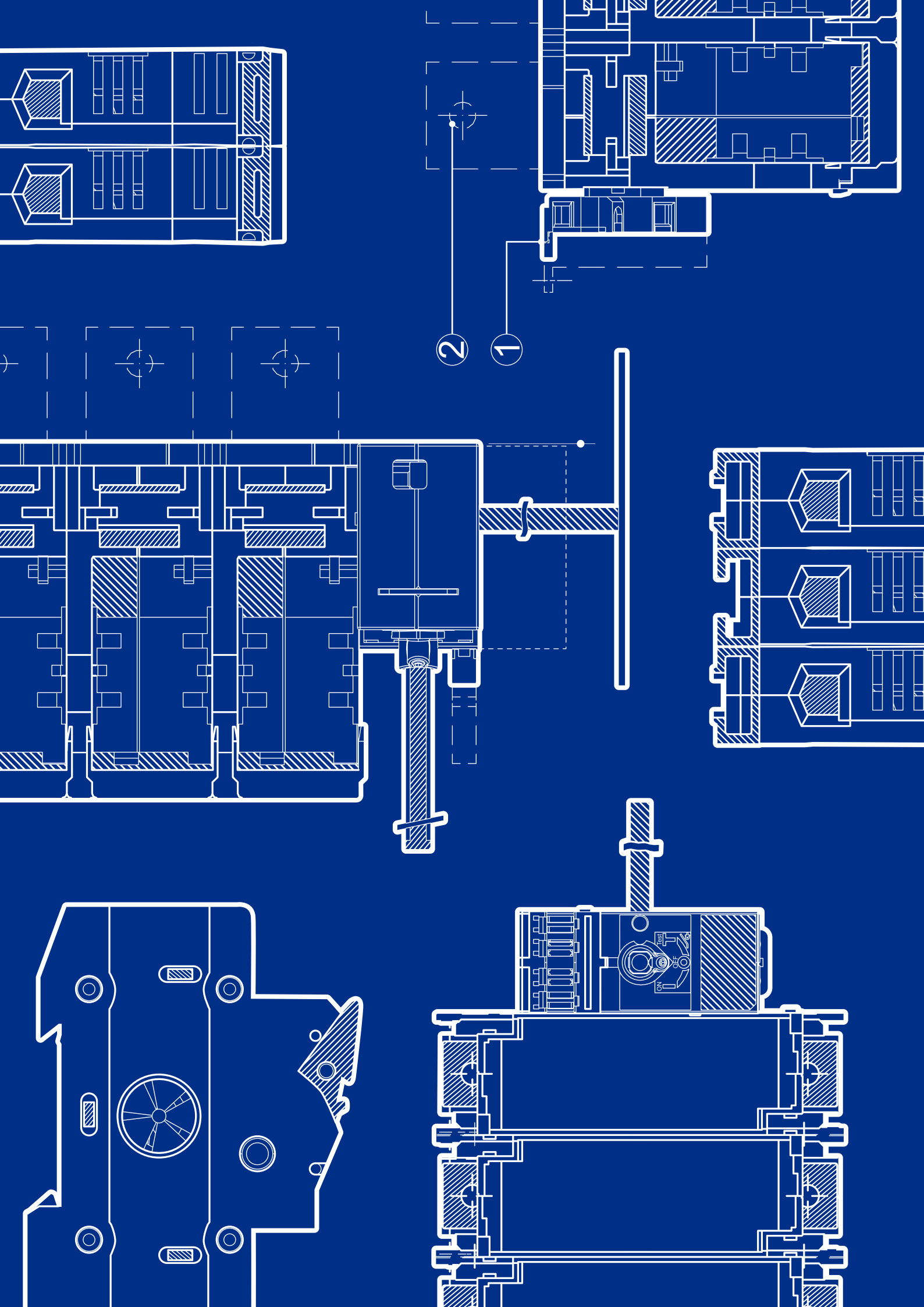
2
1

2 Fuses and Bases

DIN Cylindrical Fuses 500 V AC / 690 V AC Selection Guide 4

DIN Cylindrical Fuse Holders 690 V AC Selection Guide 5

DIN Fuse Link 500 V AC / 690 V AC Selection Guide 6

DIN Fuse Link Bases and Fuse Switches Selection Guide 6

BS Fuse Links Selection Guide 8

BS Fuse Links Base Selection Guide 8

DIN Fuse Link Accessories 44

DIN Fuse Bases and Accessories 45

DIN Fuse Switch Disconnectors 49

DIN Fuse Switch Disconnect - Accessories 63

DIN Switch Fuses 65

DIN Switch Fuse Accessories 75

BS Standard Switch Fuses 113

BS Standard Switch Fuse Accessories 124

DIN Cylindrical Fuses 500 V AC / 690 V AC Selection Guide

	gG	aM
		
Class	gG	aM
Application	General and Motor Protection	Motor Protection
Current Rating	1 to 100 A	1 to 100 A
Fault Interruption	80 to 200 kA	80 to 200 kA
Voltage Rating	415 to 690 V AC	415 to 690 V AC
Striker	No	No
Page Number	**9**	**9**

DIN Cylindrical Fuse Holders 690 V AC Selection Guide

DIN Rail Mountable



Switch Function	Toggle switch, then remove fuse
Current Rating	Suits cylindrical fuse links 1 to 100 A Complies to DIN standard
Short Circuit Capacity	Fuse links 120 kA
Voltage Rating	90 V AC / 600 V DC
Page Number	**18**

DIN Fuse Link 500 V AC / 690 V AC Selection Guide

	N000 / 00	N1	N2
			
Class	gG	gG	gG
Application	General Protection	General Protection	General Protection
Current Ratings	6 A to 160 A	16 A to 250 A	35 A to 400 A
Fault Interruption	120 kA	120 kA	120 kA
Voltage Rating	500 V	500 V	500 V
Striker	Standard stock without	Standard stock without	Standard stock without
Page Number	22	22	22

DIN Fuse Link Bases and Fuse Switches Selection Guide

Select a fuse base to fit

	DIN Fuse Bases		DIN Fuse Switch Disconnects
			
Switch Function	No switch function		Push / Pull handle to switch
Utilisation Category	N/A		Up to AC - 23 B @ 400 V AC - 22 B @ 690 V
Current Rating	160 A to 630 A		100 A to 630 A
Short Circuit Capacity	100 kA		50 kA @ 690 V AC (gG)
Voltage Rating	690 V		690 V
Page Number	44		50

N3



gG
General Protection
315 A to 800 A
120 kA
500 V
Standard stock without

22

N4



gG
General Protection
800 A to 1250 A
120 kA
500 V
Standard stock without

22

690 V DIN Range



gG and aM
General and Motor Protection
2 A to 630 A
120 kA
690 V
Optional

33

DIN Standard Switch Fuses (SSF DN)



Rotatory handle switch
Up to AC - 23 B @ 690 V DC - 23 B @ 440 V DC
63 A to 1250 A
120 kA @ 415 V AC, 80 kA @ 690 V AC
690 V

65

BS Fuse Links Selection Guide

	Clip-In Offset Tag	Bolt-In Offset Tag	Bolt-In Centre Tag
			
Class	gG and gM	gG and gM	gG and gM
Application	General and Motor Protection	General and Motor Protection	General and Motor Protection
Current Rating	2 A to 63 A	2 A to 200 A	2 A to 1250 A
Fault Interruption	80 kA	80 kA	80 kA
Voltage Rating	415 to 500 V	415 to 500 V	415 to 550 V
Striker	No	No	No
Page Number	**86**	**92**	**103**

BS Fuse Links Base Selection Guide

Select a fuse base to fit	NV	NC	BS SSF (SSFBS)
			
Switch Function	Push / Pull	Push / Pull	Rotary Handle Switch
BS Fuse Type	Clip-in Offset	Bolt-in	Bolt-in
Current Rating	2 to 63 A	2 to 125 A	2 to 1250 A
Short Circuit Capacity	80 kA @ 550 V AC	80 kA @ 550 V AC	20 kA @ 415 V AC, 80 kA @ 690 V AC
Voltage Rating	550 V AC	550 / 690 V AC	690 V AC
Page Number	**80**	**83**	**115**

DIN Cylindrical Fuses - AC



- ✔ Complies with IEC 60269-2
- ✔ 1 to 125 A range
- ✔ Type gG for general, cable, line and motor protection
- ✔ Type aM specifically for motor protection
- ✔ Type gR specifically for semiconductor protection
- ✔ 80 and 120 fault interruption capacities
- ✔ 415 V AC to 690 V AC ratings

CE

General

Un, Nominal Operational Voltage, AC	400 / 500 / 690	V AC
Ue, Rated Operational Voltage, AC	400 / 500 / 690	V AC
Ue, Rated Operational Voltage, DC, Max	440	V DC
Uimp, Impulse Withstand Voltage	6	kV
Maximum Operating Temperature With Derating	70	°C max
Standards Compliance	IEC 60269-1 IEC 60269-2	
Certifications	CE	

Dimensions for Cylindrical Fuse Links (mm)

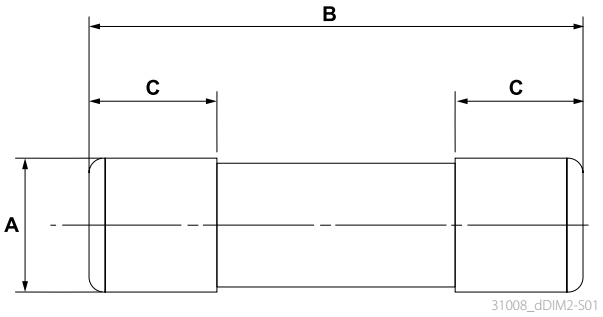

Size (mm)	A	B	C	Weight (kg)
10 x 38	10	38	8.5	0.06
14 x 51	15	51	11	0.19
22 x 58	22	58	16	0.5

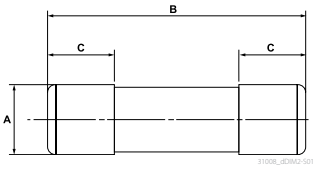

DIN Cylindrical Fuses - gG, No Striker

Fuse Rating (A)	Cartridge Size	AC Voltage Rating (V AC)	Fuse Type	Breaking Capacity @ Rated Voltage (kA)	Power Cons. (W)	Weight (kg)	Striker	Catalogue No.
1	10 x 38	500	gG	120	0.5	0.06	No Striker	FR10GG50V1
2	10 x 38	500	gG	120	0.6	0.06	No Striker	FR10GG50V2
4	10 x 38	500	gG	120	0.7	0.06	No Striker	FR10GG50V4
6	10 x 38	500	gG	120	0.8	0.06	No Striker	FR10GG50V6
10	10 x 38	500	gG	120	1	0.06	No Striker	FR10GG50V10
16	10 x 38	500	gG	120	1.6	0.06	No Striker	FR10GG50V16
20	10 x 38	500	gG	120	2	0.06	No Striker	FR10GG50V20
32	10 x 38	415	gG	120	2.9	0.06	No Striker	FR10GG50V32
20	14 x 51	690	gG	80	2.5	0.019	No Striker	FR14GG69V20
32	14 x 51	500	gG	80	3.5	0.019	No Striker	FR14GG50V32
40	14 x 51	500	gG	120	4.8	0.019	No Striker	FR14GG50V40
50	14 x 51	415	gG	120	4.9	0.019	No Striker	FR14GG50V50
40	22 x 58	690	gG	80	4.5	0.05	No Striker	FR22GG69V40
50	22 x 58	690	gG	80	5.2	0.05	No Striker	FR22GG69V50
63	22 x 58	690	gG	80	6.9	0.05	No Striker	FR22GG69V63
80	22 x 58	690	gG	80	7.8	0.05	No Striker	FR22GG69V80
100	22 x 58	500	gG	120	8.6	0.05	No Striker	FR22GG50V100
125	22 x 58	500	gG	120	8.6	0.05	No Striker	FR22GG50V125

DIN Cylindrical Fuses - gG, With Striker

Fuse Rating (A)	Cartridge Size	AC Voltage Rating (V AC)	Fuse Type	Breaking Capacity @ Rated Voltage (kA)	Power Cons. (W)	Weight (kg)	Striker	Catalogue No.
4	14 x 51	500	gG	120	1.8	0.019	With Striker	60520004
16	14 x 51	500	gG	120	2.1	0.019	With Striker	60520016
20	14 x 51	500	gG	120	2.6	0.019	With Striker	60520020
25	14 x 51	500	gG	120	2.9	0.019	With Striker	60520025
32	22 x 58	500	gG	120	0.3	0.05	With Striker	60520032
40	22 x 58	500	gG	120	0.5	0.05	With Striker	60520040
50	22 x 58	500	gG	120	0.65	0.05	With Striker	60520050

DIN Cylindrical Fuses - aM, No Striker

Fuse Rating (A)	Cartridge Size	AC Voltage Rating (V AC)	Fuse Type	Breaking Capacity @ Rated Voltage (kA)	Power Cons. (W)	Weight (kg)	Striker	Catalogue No.
1	10 x 38	690	aM	120	0.7	0.019	No Striker	60130001
4	10 x 38	690	aM	120	0.8	0.019	No Striker	60130004
6	10 x 38	690	aM	120	0.85	0.05	No Striker	60130006
16	10 x 38	690	aM	120	3.6	0.05	No Striker	60130016
20	10 x 38	690	aM	120	3.7	0.05	No Striker	60130020
1	14 x 51	690	aM	120	6.9	0.05	No Striker	60230001
4	14 x 51	690	aM	120	8.6	0.05	No Striker	60230004
6	14 x 51	690	aM	120	3.5	0.05	No Striker	60230006
8	14 x 51	690	aM	120	4.8	0.05	No Striker	60230008
10	14 x 51	690	aM	120	4.9	0.05	No Striker	60230010
16	14 x 51	690	aM	120	2.3	0.05	No Striker	60230016

DIN Cylindrical Fuses - aM, With Striker

Fuse Rating (A)	Cartridge Size	AC Voltage Rating (V AC)	Fuse Type	Breaking Capacity @ Rated Voltage (kA)	Power Cons. (W)	Weight (kg)	Striker	Catalogue No.
2	22 x 58	500	aM	120	0.75	0.05	With Striker	60530002
4	22 x 58	500	aM	120	0.85	0.05	With Striker	60530004
6	22 x 58	500	aM	120	1	0.05	With Striker	60530006
16	22 x 58	500	aM	120	1.4	0.05	With Striker	60530016
20	22 x 58	500	aM	120	1.7	0.05	With Striker	60530020
32	22 x 58	500	aM	120	2	0.05	With Striker	60530032
40	22 x 58	500	aM	120	2.6	0.05	With Striker	60530040

Time-Current Curves, Class gG Fuse Links

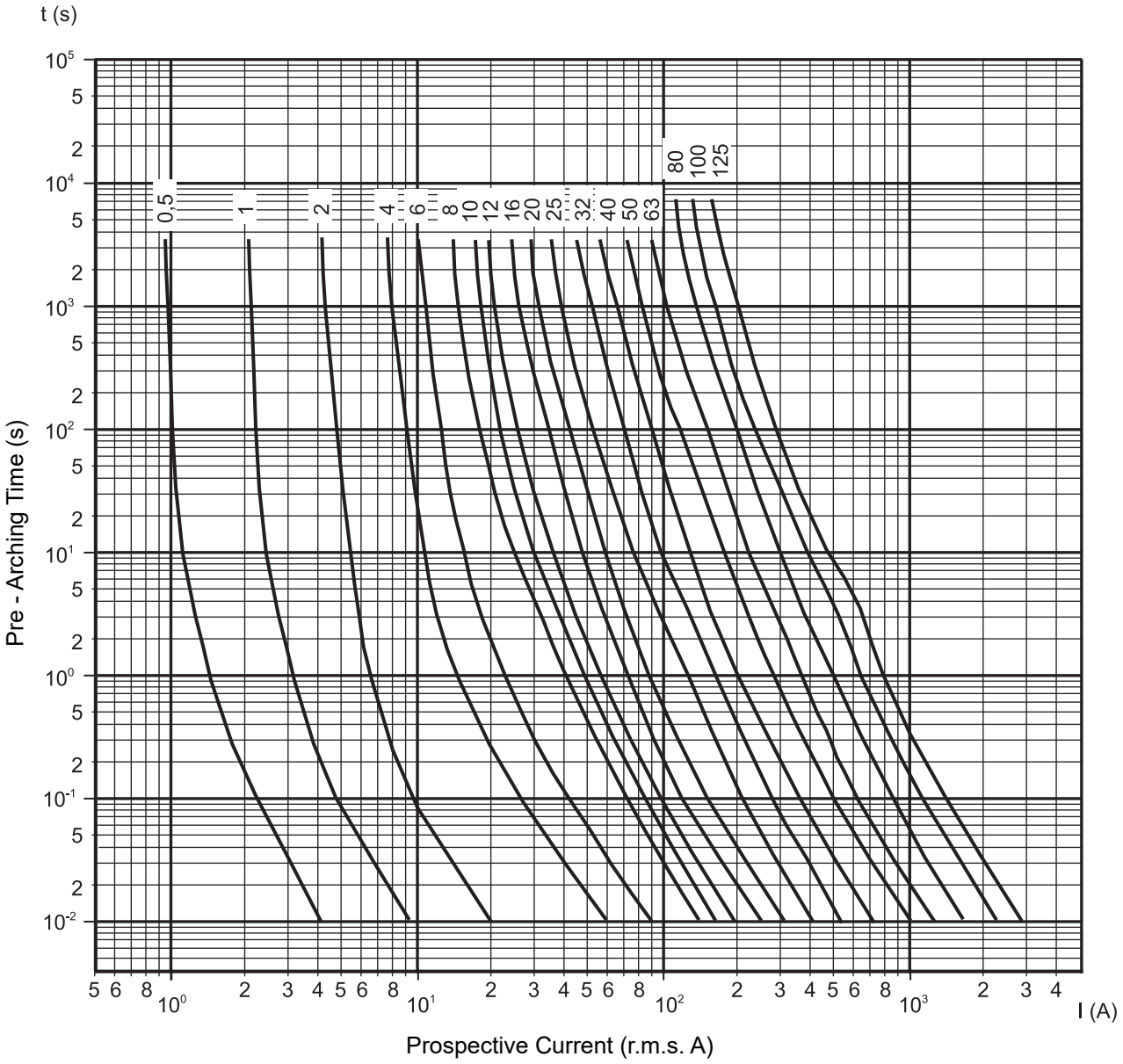

I²t Values - Class gG Fuse Links

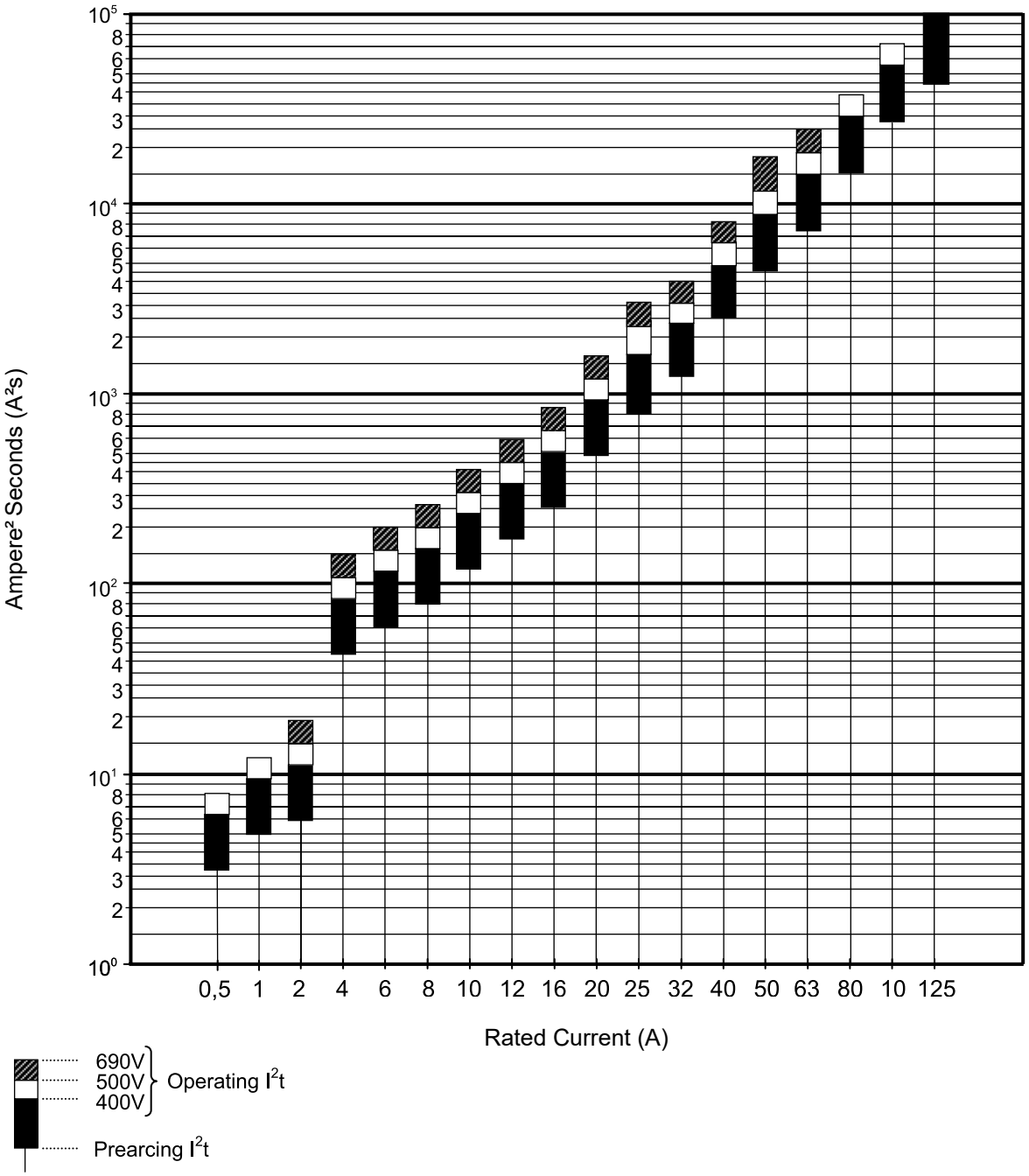

Cut-Off Characteristics - Class of gG Fuse Links

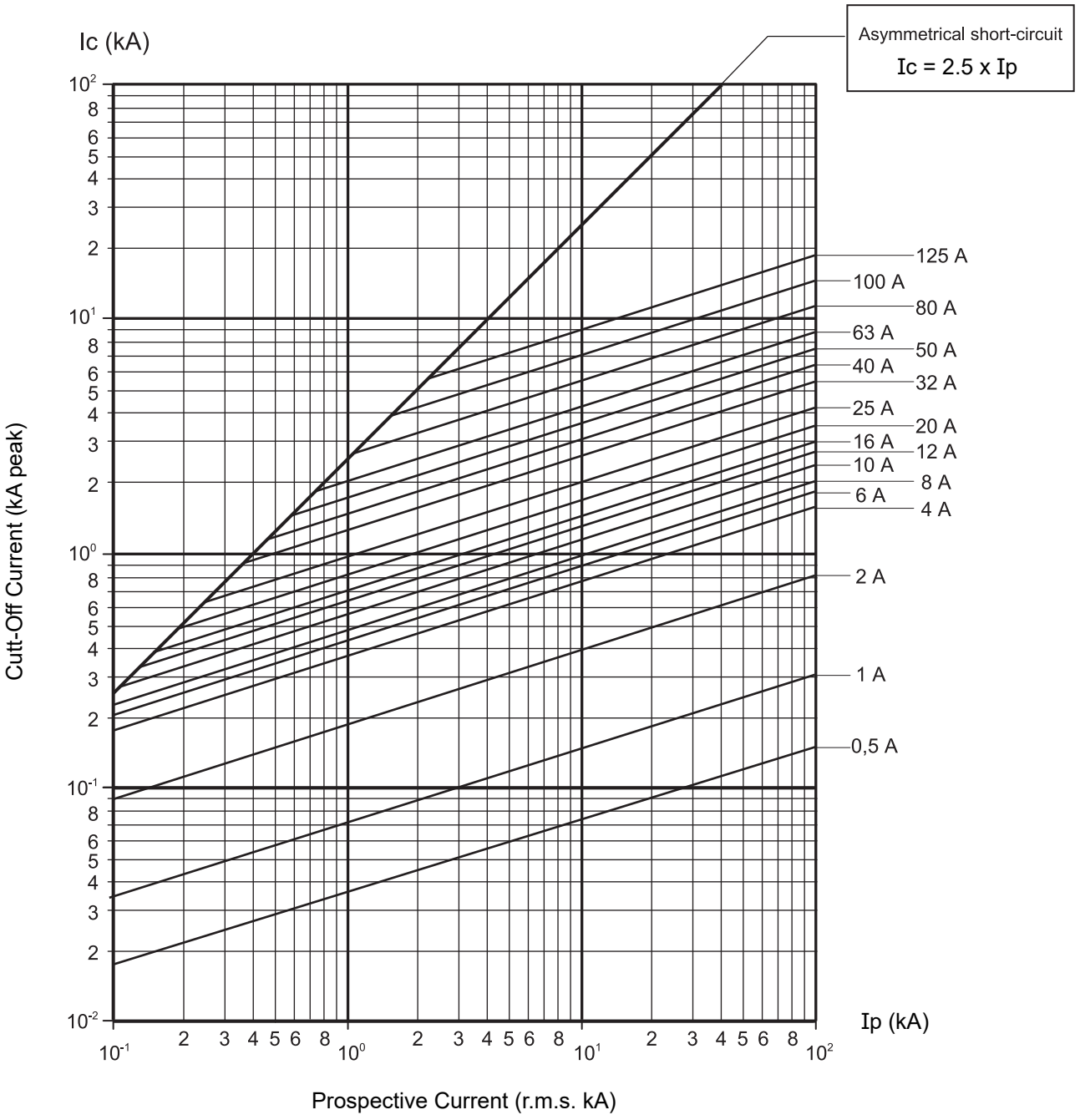

Compatible Cylindrical Fuse Holders

Holder Types, 1, 2, and 3 Pole	CMC101	CMS141	CMS221
	CMC102	CMS142	CMS222
	CMC103	CMS143	CMS223
Fuse Sizes by Fuse Holder Type	10 x 38	14 x 51	22 x 58

DIN Cylindrical Fuse Holders 690 V AC



- ✔ Toggle to disconnect circuit, then safely remove the isolated fuses
- ✔ Suits cylindrical fuse links 1 A to 100 A as per IEC / EN 60269-2200 kA fault rating
- ✔ Maximum operating voltage 690 V AC / 690 V DC
- ✔ Cable connection up to 35 mm² for wide range of installations
- ✔ Standard MCB profile to match other DIN profile electrical equipment
- ✔ DIN rail mount
- ✔ IP20

General

Un, Nominal Operational Voltage, AC	690	V AC
Ue, Rated Operational Voltage, AC	690	V AC
Ue, Rated Operational Voltage, DC, Max	690	V DC
Uimp, Impulse Withstand Voltage	6	kV
Rated Peak Withstand Current 550 V	80	kA
Maximum Operating Temperature With Derating	90	°C max
IP Rating	IP20	
Standards Compliance	DIEC 60947-2 IEC 60947-3 AS/NZS 60947-3	
Certifications	Lloyd's DNV CE	
Service Information	Product is not repairable. Please contact your local NHP sales representative for assistance.	

Dimensions for 32 A Fuse Holders (mm)

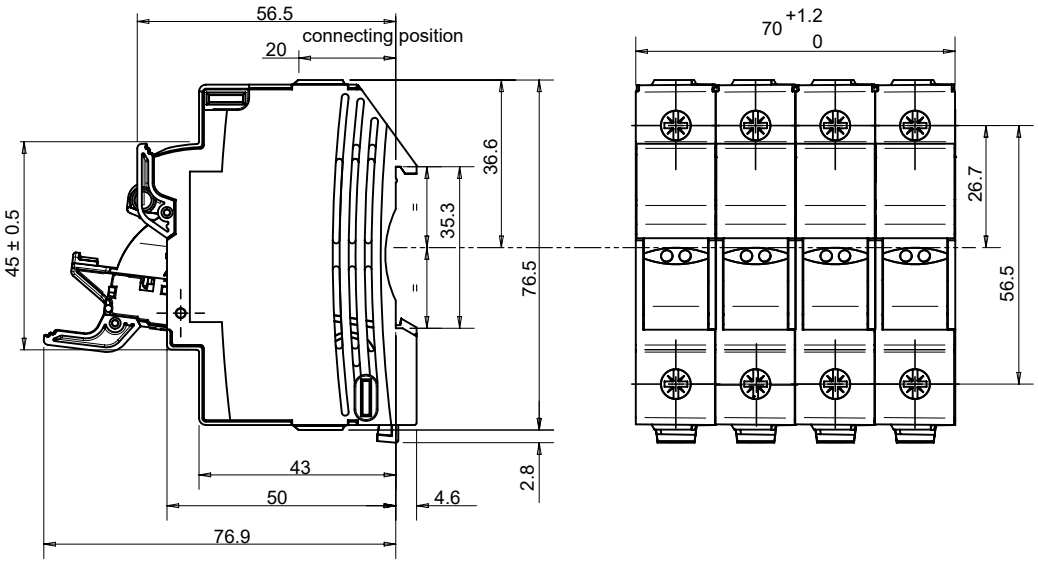

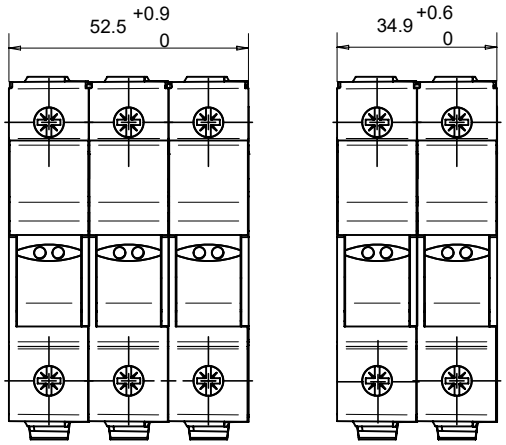

Dimensions for 50 A Fuse Holders (mm)

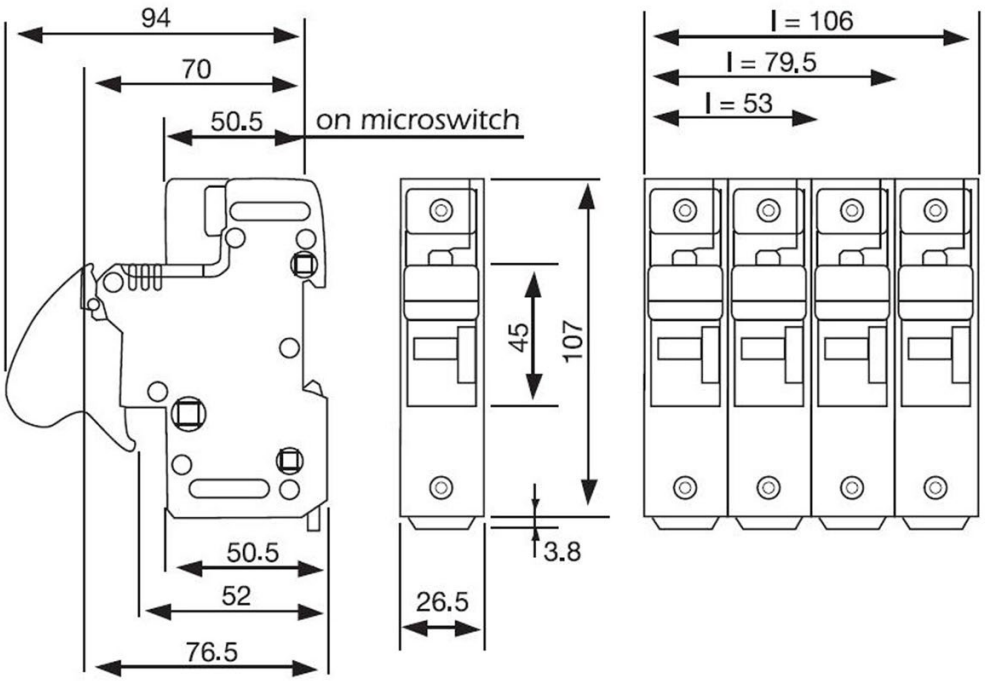

Dimensions for 100 A Fuse Holders (mm)

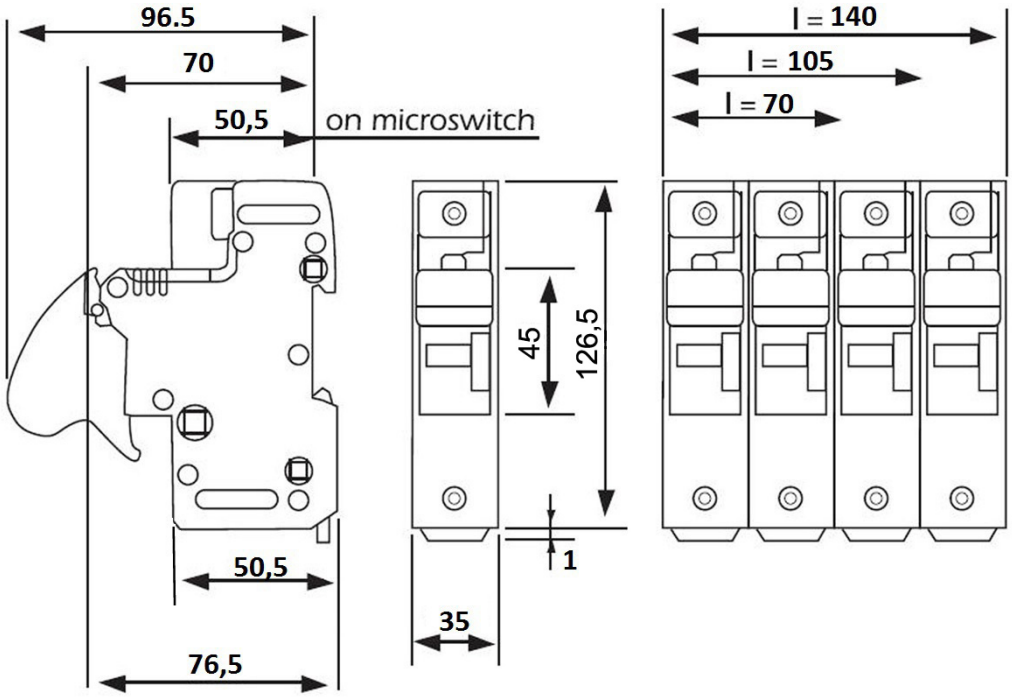

Fuse Rating (A)	Poles	H x W x D (mm)	Ue Max (V AC)	Ue Max (V DC)	Catalogue No.
32	1	81 x 18 x 58	690	440	CMC101
32	2	81 x 36 x 58	690	440	CMC102
32	3	81 x 54 x 58	690	440	CMC103
32	4	81 x 72 x 58	690	440	CMC104
50	1	96 x 27 x 69	690	440	CMC141
50	2	96 x 54 x 69	690	440	CMC142
50	3	96 x 81 x 69	690	440	CMC143
100	1	112 x 36 x 70	690	440	CMS221
100	2	112 x 72 x 70	690	440	CMS222
100	3	112 x 108 x 70	690	440	CMS223

Ratings Chart

	CMC10	CMS14	CMS22
Size	10x38	14x51	22x58
Number of poles/phases	1, 1+N, 2, 3, 3+N, 4	1, 1+N, 2, 3, 3+N, 4	1, 1+N, 2, 3, 3+N, 4
Conventional free air thermal current with fuse links I_{th}	32 A	50 A	125 A
Max. power dissipation	4 W	5 W	9.5 W
Utilisation category	AC20B/DC20B	AC20B/DC20B	AC20B/DC20B
Rated insulation voltage U_i	1000 V	690 V	690 V
SCCR	200 kA	100 kA	100 kA
Rated impulse withstand voltage U_{imp}	6 kV	8 kV	8 kV
Degree of protection	IP 20	IP 20	IP 20
Voltage limit for blown fuse indicator	-	-	-
Indication system	-	-	-
Operating temperature	-40°C to 70°C with carrier operation -50°C to 90°C without carrier operation	-25°C to 60°C	-25°C to 60°C
Storage temperature	-40°C to 70°C	-25°C to 80°C	-25°C to 80°C
Connection	Max. tightening torque: 2 Nm (17.7 lbs.-in) Rigid / Stranded wire = 1-16 mm² (16-6AWG) Max. 2x6 mm² PZ2 or flat 5.5x1 mm screw drivers recommended (max. diameter 6 mm)	Max. tightening torque: 3.5 Nm (30 lbs.-in) Rigid wire = 1.5-35 mm² (16-3AWG) Stranded wire = 1.5-25 mm² (16-4AWG) PZ2 or flat 5.5x1 mm screw drivers recommended (max. diameter 6 mm)	Max. tightening torque: 4 Nm (35 lbs.-in) Rigid wire = 1.5-50 mm² (16-1AWG) Multistrand wire = 35 mm² (3AWG) PZ2 or flat 6.5x1.2 mm screw drivers recommended (max. diameter 7 mm)
Vibration	Withstand on the 3 main axis*: Sinusoidal vibration testing according to IEC 60068-2-6 2 to 13 Hz x= 1 mm peak 13 to 100 Hz y= 0.7 g peak according to french marine application Random vibration testing according to IEC 61373 Category 1 Class B	Withstand on the 3 main axis*: Sinusoidal vibration testing according to IEC 60068-2-6 2 to 13 Hz x= 1 mm peak 13 to 100 Hz y= 0.7 g peak according to french marine application Random vibration testing according to IEC 61373 Category 1 Class B	Withstand on the 3 main axis*: Sinusoidal vibration testing according to IEC 60068-2-6 2 to 13 Hz x= 1 mm peak 13 to 100 Hz y= 0.7 g peak according to french marine application Random vibration testing according to IEC 61373 Category 1 Class B
Shock	Shock testing according to IEC 61373 Category 1 Class B Shock testing according to IEC 60068-2-27 15 g/11 ms/18 shocks * for specific usage please contact us	Shock testing according to IEC 61373 Category 1Class B Shock testing according to IEC 60068-2-27 15 g/11 ms/18 shocks * for specific usage please contact us	Shock testing according to IEC 61373 Category 1 Class B Shock testing according to IEC 60068-2-27 15 g/11 ms/18 shocks * for specific usage please contact us

DIN Fuse Links 500 V AC -gG



- ✔ Complies with AS/NZS 60269.2.1:2005 and IEC 60269-2-1
- ✔ 120 kA fault interruption capacity
- ✔ Type gG for general,cable, line and motor protection
- ✔ Sizes: 000, 1, 2, 3 and 4
- ✔ Dimensions according to DIN43 620 parts 1-4
- ✔ Fuses include a RED blown fuse indicator in top of fuse body
- ✔ Lead-free contact blades
- ✔ Non-isolated standard application metal gripping lugs
- ✔ Low temperature rise
- ✔ Low power losses
- ✔ 500 V AC rated.

CE

General

Un, Nominal Operational Voltage, AC	500	V AC
Ue, Rated Operational Voltage, AC	500	V AC
Ue, Rated Operational Voltage, DC, Max	250 / 440	V DC
Uimp, Impulse Withstand Voltage	8	kV
Maximum Operating Temperature With Derating	70	°C max
Standards Compliance	EN 60269-2-1 IEC 60269-2-1 AS/NZS 60269-2-1 HD 60269-2	
Certifications	CE	

Dimensions for NH / Din Fuse Links (N000-N4) (mm)

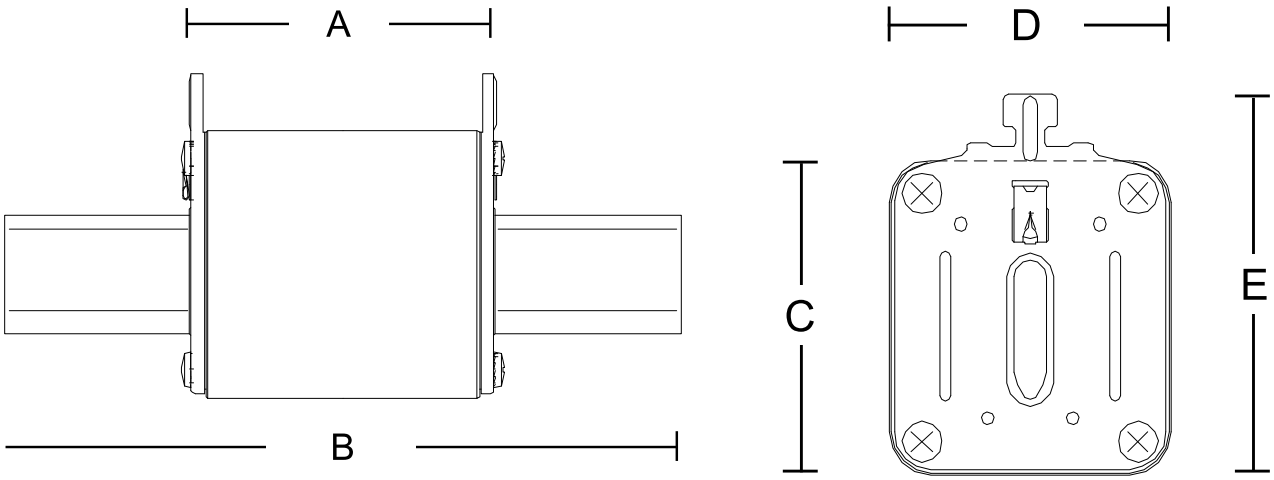

Series	Size Reference	Brand	A Body Length	B Body + Tags	C Body Height	D Body Width	E Body Height + Gripping Lugs
N000 6 – 125	000	FuseMaster	49.0	78.0	40.0	21.0	52.5
N00 125 – 160	00	FuseMaster	49.0	78.0	48.0	30.0	58.5
N1 16 – 160	1	FuseMaster	65.0	135.0	46.0	28.0	65.0
N1 200 – 250	1	FuseMaster	65.0	135.0	46.0	46.0	58.5
N2 36 – 160	2	FuseMaster	65.0	150.0	46.0	28.0	72.5
N2 200 – 250	2	FuseMaster	65.0	150.0	47.5	47.5	70.0
N2 300 – 400	2	FuseMaster	65.0	150.0	56.0	56.0	71.0
N3 315 – 400	3	FuseMaster	68.0	150.0	56.5	57.0	84.0
N3 425 – 630	3	FuseMaster	66.0	150.0	66.5	67.0	84.0

Fuse Rating (A)	Cartridge Size	AC Voltage Rating (V AC)	Utilisation Category	Breaking Capacity @ Rated Voltage (kA)	Catalogue No.
2	000	500	gG	120	N0006
10	000	500	gG	120	N00010
16	000	500	gG	120	N00016
20	000	500	gG	120	N00020
25	000	500	gG	120	N00025
32	000	500	gG	120	N00032
35	000	500	gG	120	N00035
40	000	500	gG	120	N00040
50	000	500	gG	120	N00050
63	000	500	gG	120	N00063
80	000	500	gG	120	N00080
100	000	500	gG	120	N000100
16	1	500	gG	120	N116
20	1	500	gG	120	N120
25	1	500	gG	120	N125
32	1	500	gG	120	N132
35	1	500	gG	120	N135
40	1	500	gG	120	N140
50	1	500	gG	120	N150
63	1	500	gG	120	N163
80	1	500	gG	120	N180
100	1	500	gG	120	N1100
125	1	500	gG	120	N1125
160	1	500	gG	120	N1160
200	1	500	gG	120	N1200
224	1	500	gG	120	N1224
250	1	500	gG	120	N1250
35	2	500	gG	120	N235
40	2	500	gG	120	N240

Fuse Rating (A)	Cartridge Size	AC Voltage Rating (V AC)	Utilisation Category	Breaking Capacity @ Rated Voltage (kA)	Catalogue No.
50	2	500	gG	120	N250
63	2	500	gG	120	N263
80	2	500	gG	120	N280
100	2	500	gG	120	N2100
125	2	500	gG	120	N2125
160	2	500	gG	120	N2160
200	2	500	gG	120	N2200
224	2	500	gG	120	N2224
250	2	500	gG	120	N2250
300	2	500	gG	120	N2300
315	2	500	gG	120	N2315
355	2	500	gG	120	N2355
400	2	500	gG	120	N2400
315	3	500	gG	120	N3315
355	3	500	gG	120	N3355
400	3	500	gG	120	N3400
424	3	500	gG	120	N3425
500	3	500	gG	120	N3500
630	3	500	gG	120	N3630
800	4	500	gG	120	N4800
900	4	500	gG	120	N4900
1250	4	500	gG	120	N41250
1600	4	500	gG	120	N41600

Time / Current Performance for Size 000 / 00, 2 A to 16 A , gG 500 V

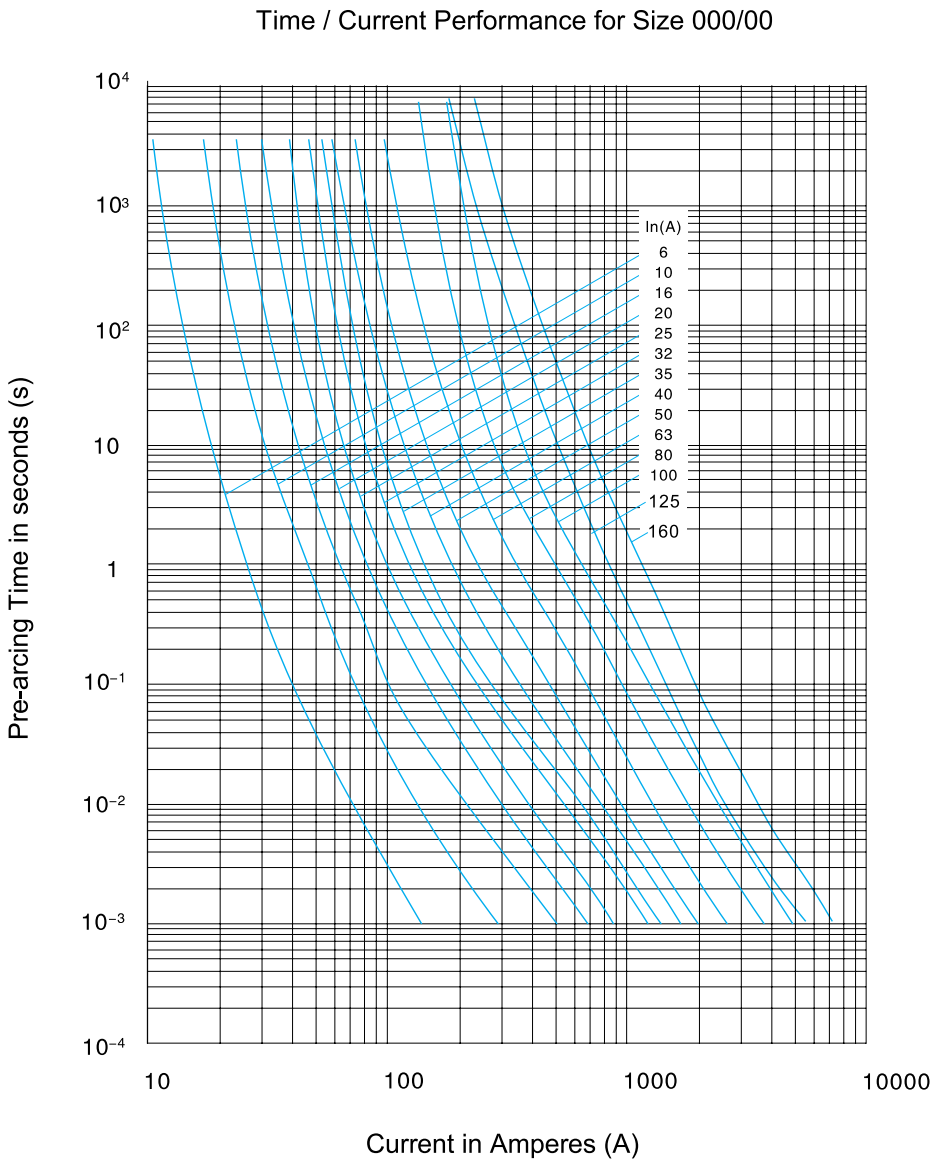

Time / Current Performance for Size 1 , 16 A to 250 A gG 500 V

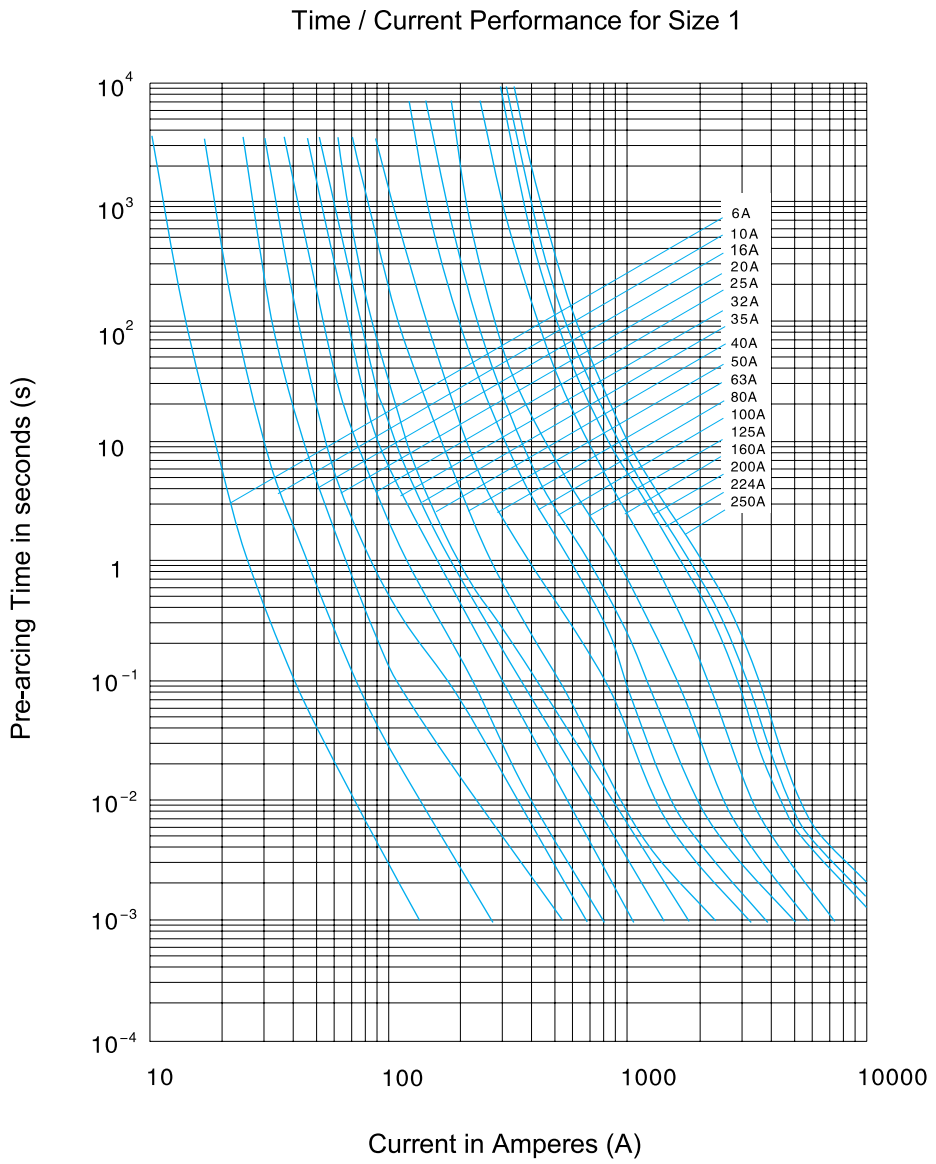

Time / Current Performance for Size 2, 35 A to 400 A , gG 500 V

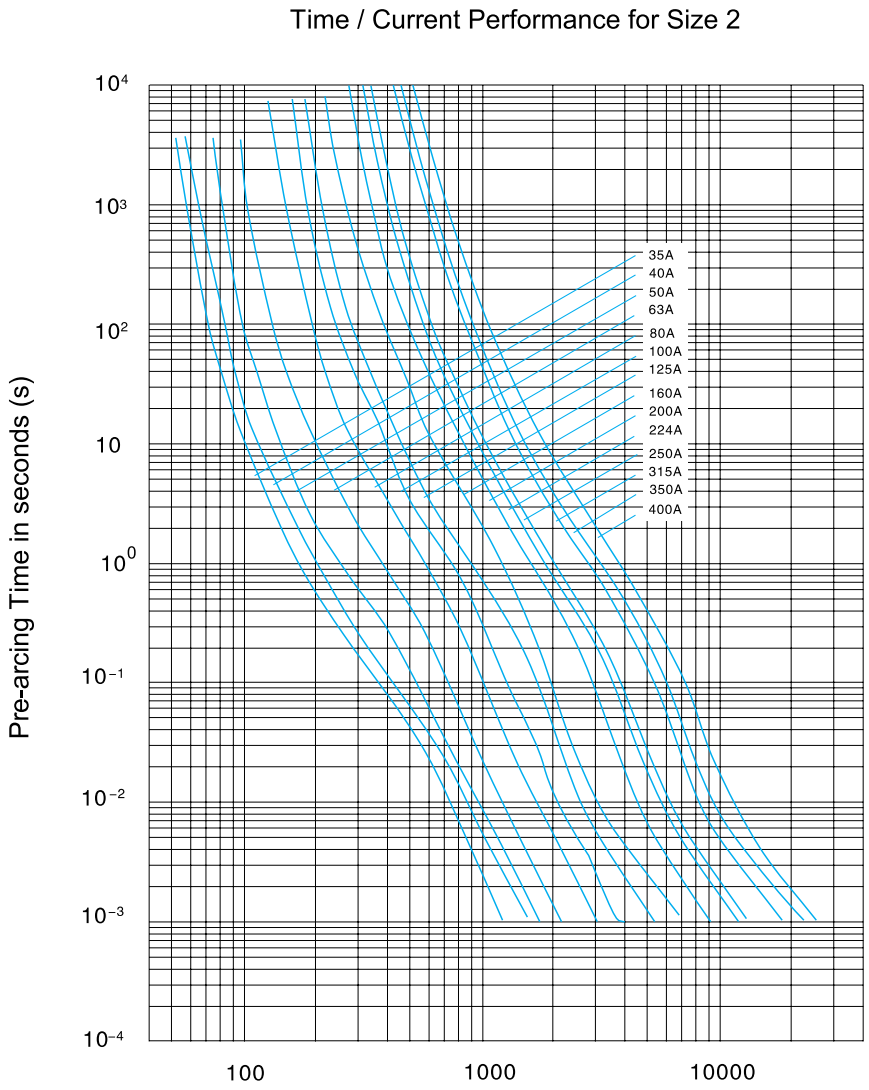

Time / Current Performance for Size 3, 315 A to 630 A , gG 500 V

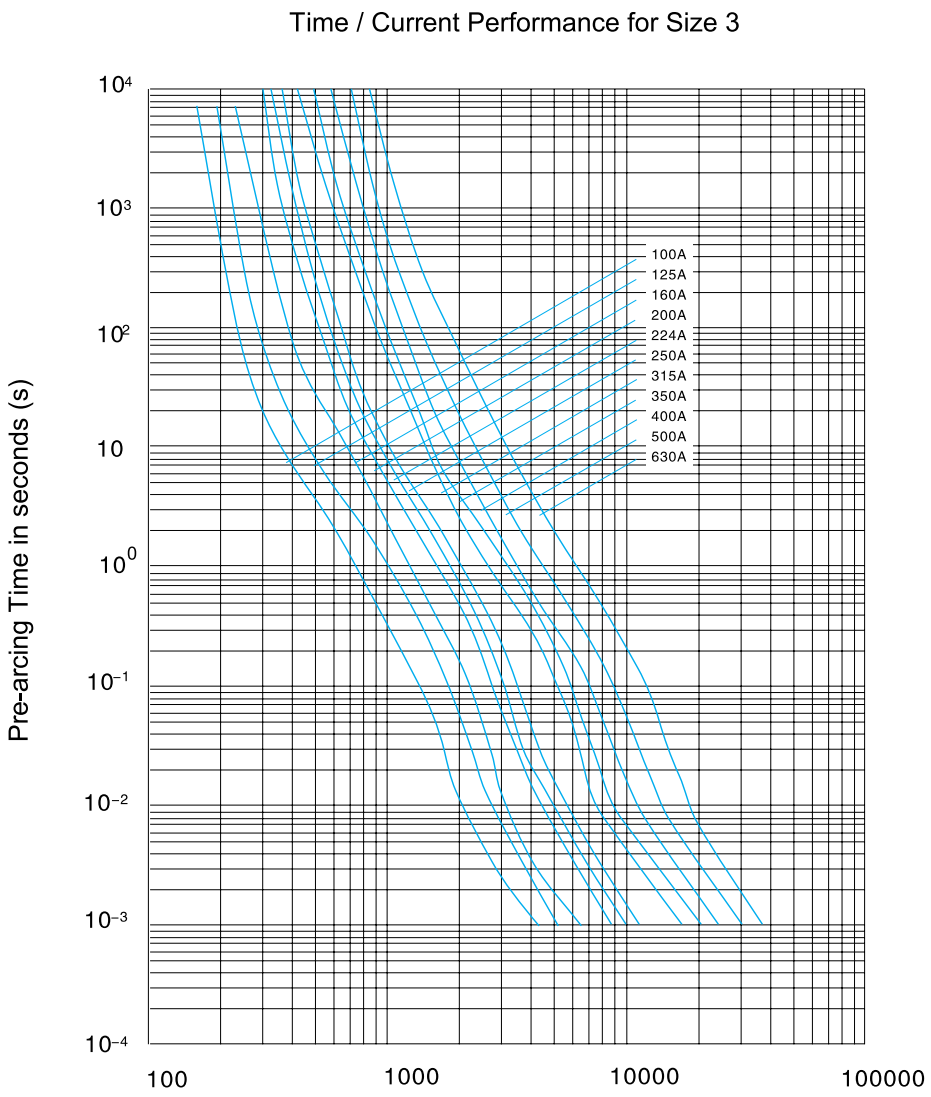

Time / Current Performance for Sizes 3 to 4, 315 A to 1250 A, gG 500 V

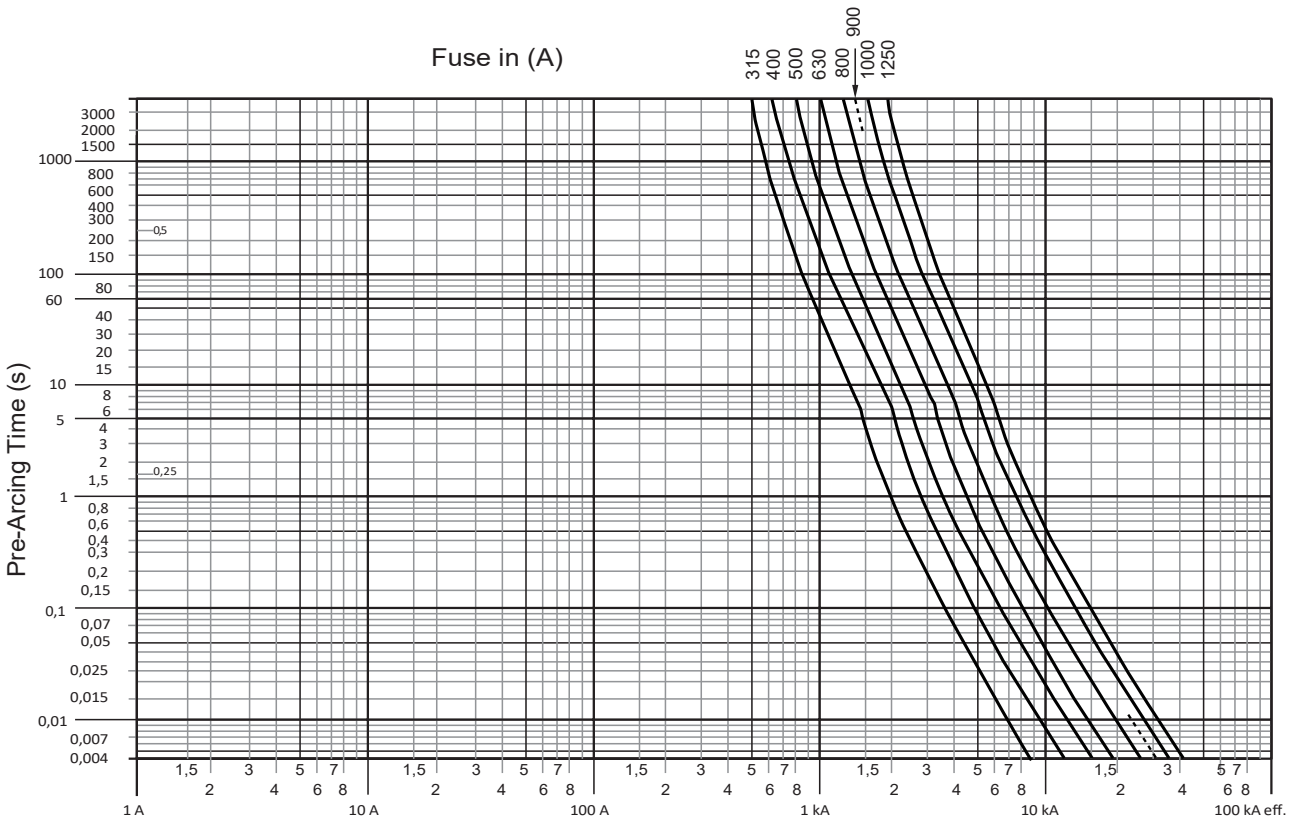

Fuses and Bases

Cut-Off Characteristics for Size 000 to 4

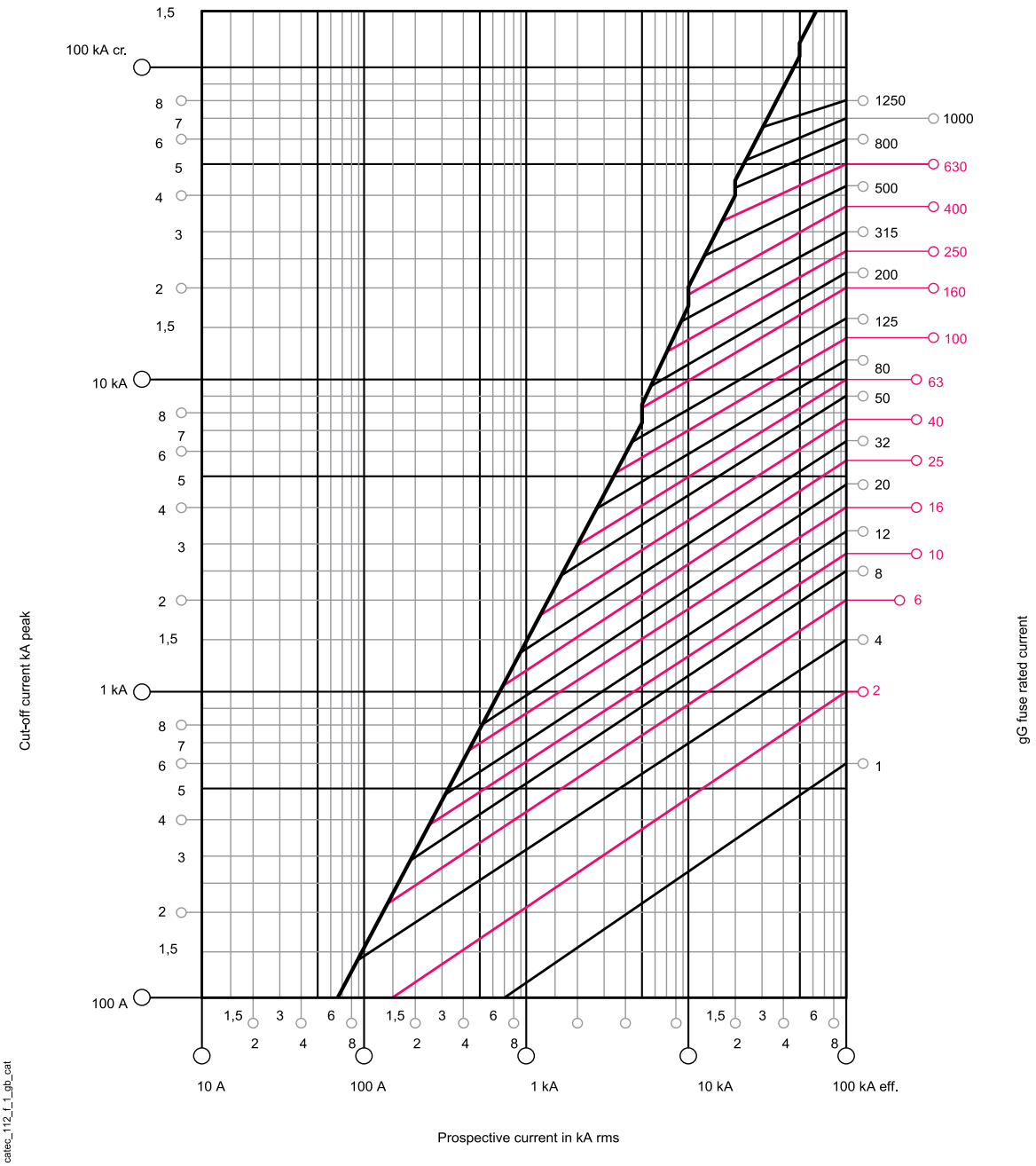

I²t Let-Through Energy and Power Loss Values Size 000, 1, 2, 3 Fuse Links (16 A to 630 A)

Size	Catalogue No.	Current Rating	Pre-Arcing I²t Value (A²s)	Total I²t Value @ 500 V (A²s)	Power Loss (W)
000	N00016	16	307	1,060	1.4
	N00020	20	691	1,800	1.6
	N00025	25	1,080	3,700	2.4
	N00032	32	1,920	7,800	2.6
	N00040	40	3,130	14,100	3.2
	N00050	50	6,250	17,000	4.3
	N00063	63	14,000	25,400	4.7
	N00080	80	25,000	47,000	4.8
	N000100	100	39,000	72,000	6.5
00	N00125	125	48,000	132,000	7.5
	N00160	160	98,000	204,000	8.8
1	N1 80	80	22,000	50,000	5
	N1 100	100	34,000	85,000	6.8
	N1 125	125	50,000	145,000	9
	N1 160	160	101,000	233,000	11.2
	N1 200	200	175,000	332,000	13.2
	N1 224	224	232,000	471,000	15.2
	N1 250	250	310,000	582,000	15.5
2	N2 160	160	105,000	225,000	11.8
	N2 200	200	150,000	355,000	13.8
	N2 250	250	215,000	650,000	16.2
	N2 300	300	335,000	1,076,000	19.8
	N2 315	315	431,000	1,289,000	22
	N2 355	355	658,000	1,560,000	22.7
	N2 400	400	860,000	1,710,000	27.6
3	N3 315	315	467,000	1,322,000	19
	N3 355	355	591,000	1,652,000	22
	N3 400	400	804,000	1,820,000	26
	N3 425	424	883,000	2,170,000	31
	N3 500	500	1,720,000	3,345,000	36
	N3 630	630	3,219,000	4,900,000	38

DIN Fuse Links 690 V AC -gG and aM



- ✔ Complies with AS/NZS 60269.2.1: 2005 and IEC 60269-2-1
- ✔ 120 kA fault interruption capacity Type gG for general, cable, line and aM for motor protection
- ✔ Sizes: 000, 1, 2 and 3
- ✔ Dimensions according to DIN 43 620 Parts 1 - 4
- ✔ Fuses include a RED blown fuse indicator in top of fuse body
- ✔ Lead-free contact blades
- ✔ Non-isolated standard application metal gripping lugs
- ✔ Low temperature rise
- ✔ Low power losses
- ✔ 690 V AC rated

CE

General

Un, Nominal Operational Voltage, AC	690	V AC
Ue, Rated Operational Voltage, AC	690	V AC
Ue, Rated Operational Voltage, DC, Max	220 / 440	V DC
Uimp, Impulse Withstand Voltage	8	kV
Maximum Operating Temperature With Derating	70	°C max
Standards Compliance	IEC 60269-2-1 AS/NZS 60269-2-1	
Certifications	CE	

Dimensions for NH/DIN gG and aM Fuse Links (mm)

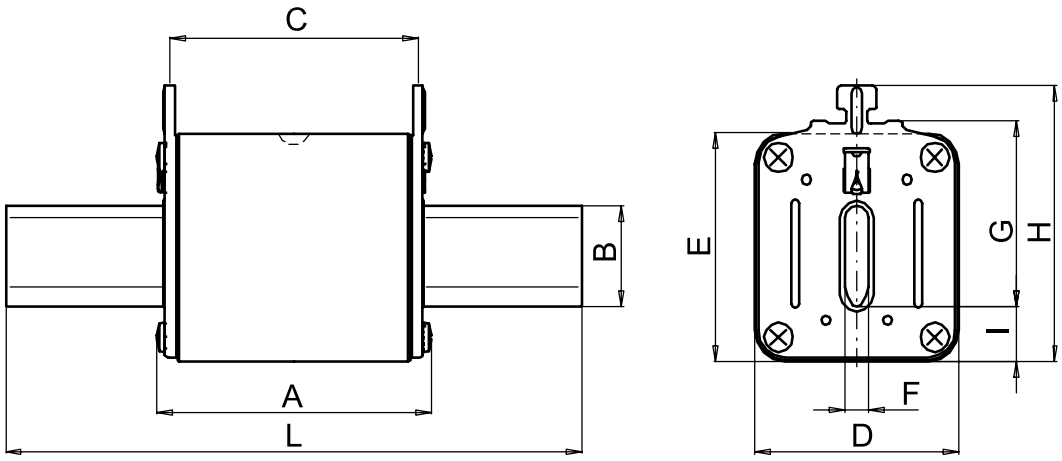

	Amax.	B	C	D	E	F	G	H	I	L
20 477 13	54	15	47	20.5	40.5	6	35	52	7	78
20 209 13	54	15	47	29.5	46	6	35	58	13	78
20 211 13	75	20	65	42	51.5	6	40	64	14	135
20 213 13 ≤ 315 A	75	26	65	53	59	6	60	83	14	150
20 213 13 355 - 425 A	75	32	65	65	73.5	6	60	86	17	150
20 213 13 ≥ 500 A	75	32	65	73	73	6	60	86	16	150
20 477 08	54	15	47	20.5	40.5	6	35	52	7	78
20 209 08	54	15	47	29.5	46	6	35	58	13	78
20 211 08	75	20	65	42	51.5	6	40	64	14	135
20 212 08 ≤ 200 A	75	20	65	42	51.5	6	48	72	14	150
20 212 08 ≥ 224 A	75	26	65	53	59	6	48	72	14	150
20 213 08 ≤ 315 A	75	26	65	53	59	6	60	83	14	150
20 213 08 400 A	75	32	65	65	73.5	6	60	86	17	150
20 213 08 500 - 630 A	75	32	65	73	73	6	60	86	16	150

Fuse Rating (A)	Cartridge Size	AC Voltage Rating (V AC)	Utilisation Category	Breaking Capacity @ Rated Voltage (kA)	Catalogue No.
2	000	690	gG	120	204771302
4	000	690	gG	120	204771304
6	000	690	gG	120	204771306
10	000	690	gG	120	204771310
16	000	690	gG	120	204771316
20	000	690	gG	120	204771320
25	000	690	gG	120	204771325
32	000	690	gG	120	204771332
35	000	690	gG	120	204771335
40	000	690	gG	120	204771340
50	000	690	gG	120	204771350
63	00	690	gG	120	202091363
80	00	690	gG	120	202091380
100	00	690	gG	120	2020913100
125	00	690	gG	120	2020913125
16	1	690	gG	120	202111316
20	1	690	gG	120	202111320
25	1	690	gG	120	202111325
35	1	690	gG	120	202111332
40	1	690	gG	120	202111335
50	1	690	gG	120	202111340
63	1	690	gG	120	202111350
80	1	690	gG	120	202111363
100	1	690	gG	120	202111380
125	1	690	gG	120	2021113100
160	1	690	gG	120	2021113125
200	1	690	gG	120	2021113160
224	1	690	gG	120	2021113200
250	1	690	gG	120	2021113250

Fuse Rating (A)	Cartridge Size	AC Voltage Rating (V AC)	Utilisation Category	Breaking Capacity @ Rated Voltage (kA)	Catalogue No.
35	2	690	gG	120	202121335
40	2	690	gG	120	202121340
50	2	690	gG	120	202121350
63	2	690	gG	120	202121363
80	2	690	gG	120	202121380
100	2	690	gG	120	2021213100
125	2	690	gG	120	2021213125
160	2	690	gG	120	2021213160
200	2	690	gG	120	2021213200
224	2	690	gG	120	2021213224
250	2	690	gG	120	2021213250
300	2	690	gG	120	2021213300
315	2	690	gG	120	2021213315
355	2	690	gG	120	2021213355
400	2	690	gG	120	2021213400
300	3	690	gG	120	2021313300
315	3	690	gG	120	2021313315
355	3	690	gG	120	2021313355
400	3	690	gG	120	2021313400
425	3	690	gG	120	2021313425
500	3	690	gG	120	2021313500
630	3	690	gG	120	2021313630

Fuse Rating (A)	Cartridge Size	AC Voltage Rating (V AC)	Utilisation Category	Breaking Capacity @ Rated Voltage (kA)	Catalogue No.
2	000	690	aM	120	204770802
4	000	690	aM	120	204770804
6	000	690	aM	120	204770806
10	000	690	aM	120	204770810
16	000	690	aM	120	204770816
20	000	690	aM	120	204770820
25	000	690	aM	120	204770825
32	000	690	aM	120	204770832
35	000	690	aM	120	204770835
40	000	690	aM	120	204770840
50	000	690	aM	120	204770850
63	00	690	aM	120	202090863
80	00	690	aM	120	202090880
100	00	690	aM	120	2020908100
125	00	690	aM	120	2020908125
160	00	690	aM	120	2020908160
16	1	690	aM	120	202110816
20	1	690	aM	120	202110820
25	1	690	aM	120	202110825
35	1	690	aM	120	202110835
40	1	690	aM	120	202110840
50	1	690	aM	120	202110850
63	1	690	aM	120	202110863
80	1	690	aM	120	202110880
100	1	690	aM	120	2021108100
125	1	690	aM	120	2021108125
160	1	690	aM	120	2021108160
200	1	690	aM	120	2021108200
224	1	690	aM	120	2021108224
250	1	690	aM	120	2021108250

Fuse Rating (A)	Cartridge Size	AC Voltage Rating (V AC)	Utilisation Category	Breaking Capacity @ Rated Voltage (kA)	Catalogue No.
35	2	690	aM	120	202120835
50	2	690	aM	120	202120850
63	2	690	aM	120	202120863
80	2	690	aM	120	202120880
100	2	690	aM	120	2021208100
125	2	690	aM	120	2021208125
160	2	690	aM	120	2021208160
200	2	690	aM	120	2021208200
250	2	690	aM	120	2021208250
315	2	690	aM	120	2021208315
355	2	690	aM	120	2021208355
400	2	690	aM	120	2021208400
315	3	690	aM	120	2021308315
400	3	690	aM	120	2021308400
500	3	690	aM	120	2021308500
630	3	690	aM	120	2021308630

Time - Current Characteristics, gG, 690 V AC

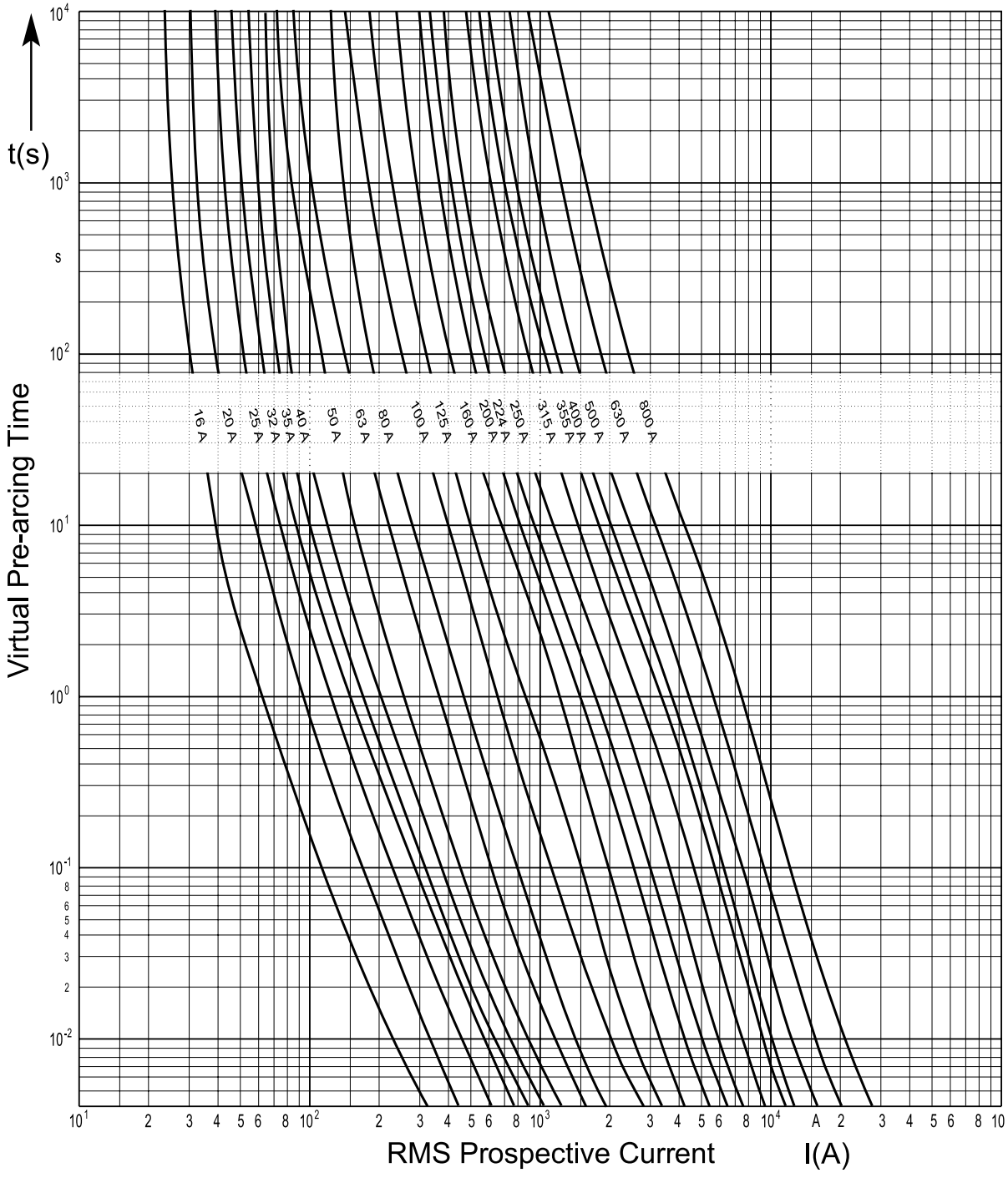

Time - Current Characteristics, aM, 690 V AC

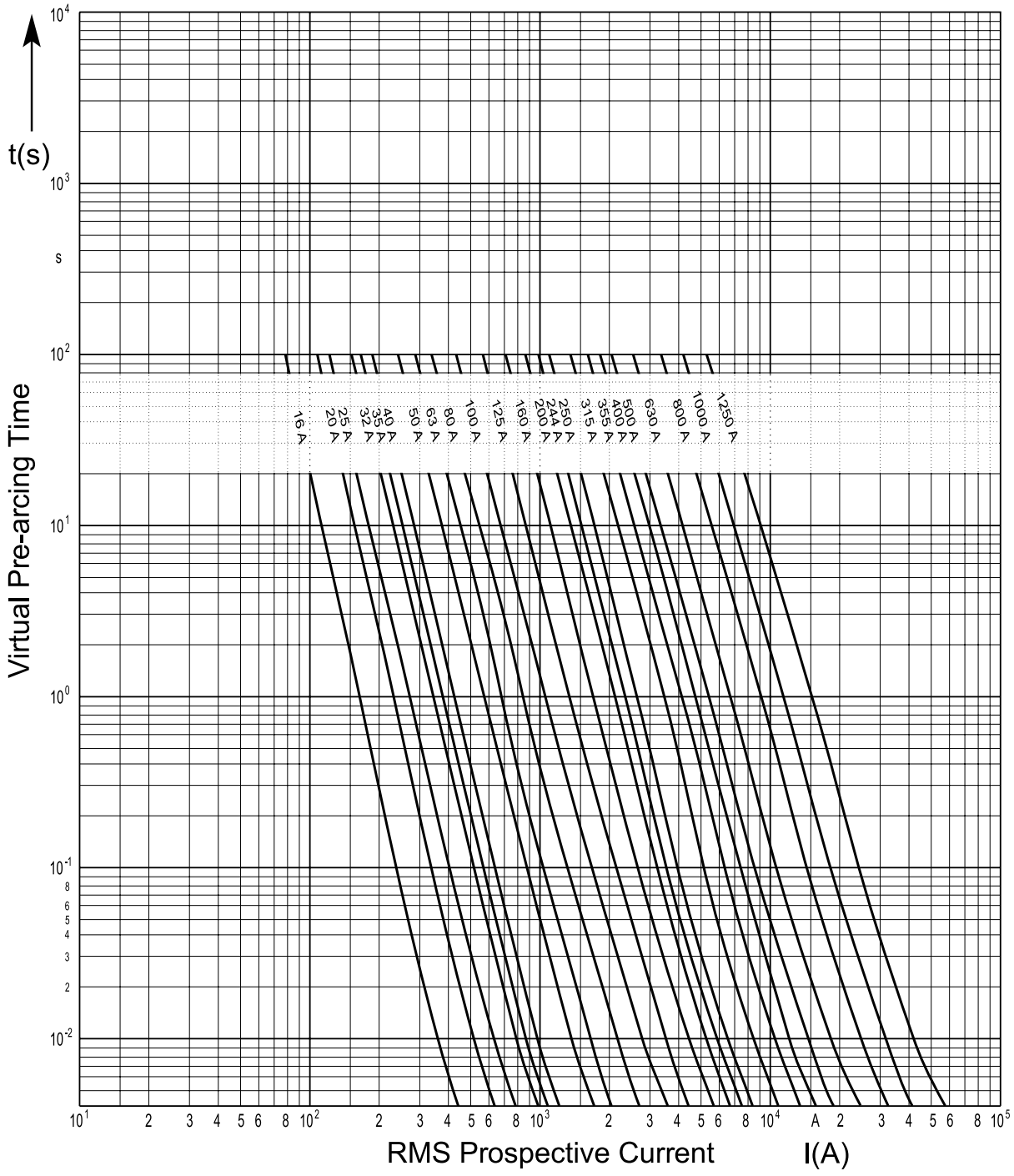

Cut-Off Characteristics, gG, 690 V AC

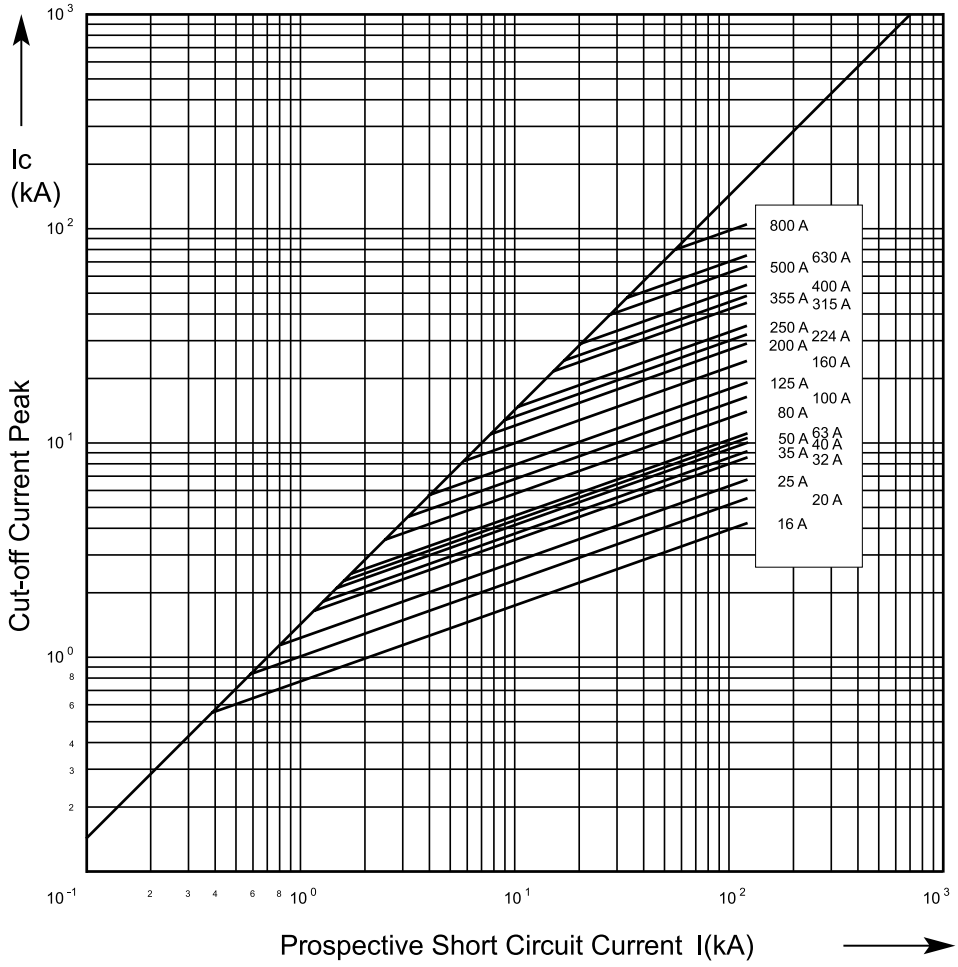

Cut-Off Characteristics, aM, 690 V AC

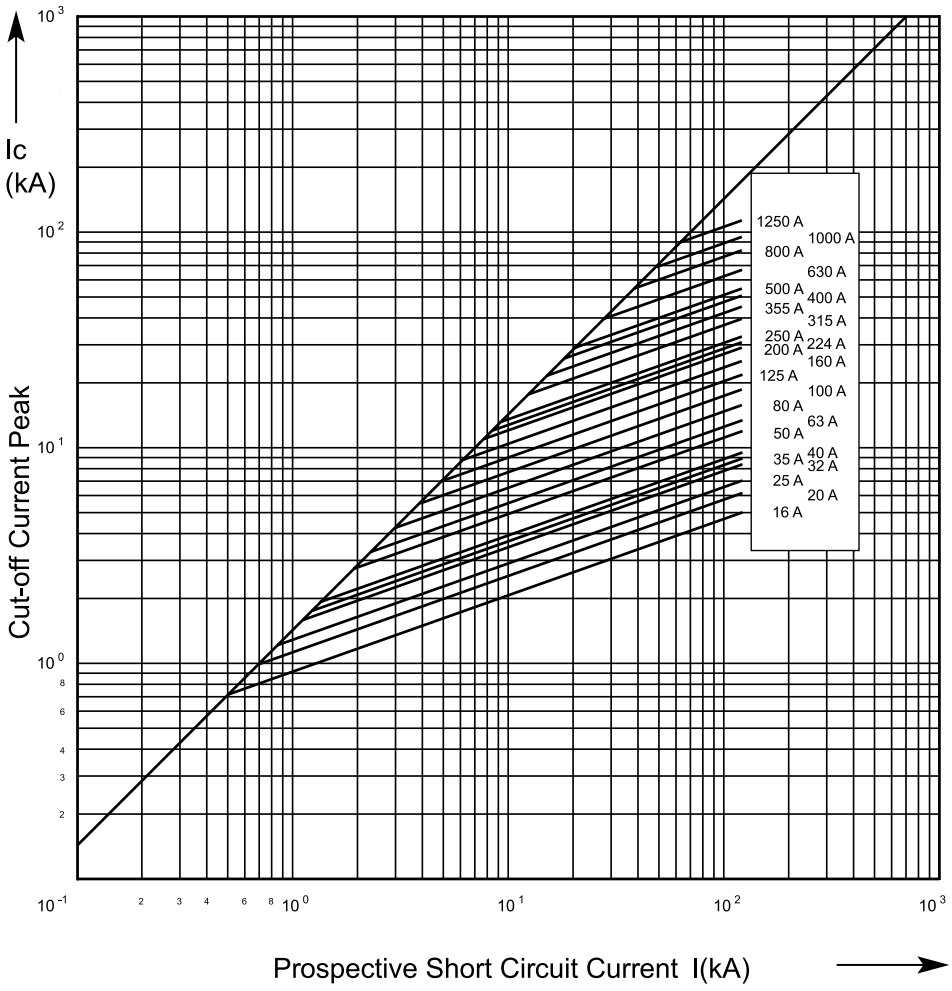

Extractor Handles

DIN Fuse pullers are used to insert and remove NH-DIN fuse links and solid links of sizes 000 up to 4 from NH-DIN fuse bases and switch fuses. Can be used in application up to 690 V AC.



Item Description	Catalogue No.
Extractor Handle DIN Fuse	DINF

DFB DIN Fuse Bases Single Pole

DFB DIN Fuse Bases Size 00 to 3, 1 Pole

Open Type



Item Description	Catalogue No.
Fuse Base DFB Size 00 Fuse,160 A, 1 Pole, Back Plate Mount	65001010
Fuse Base DFB Size 00 Fuse,160 A, 1 Pole, DIN Rail Mount	65001110
Fuse Base DFB Size 1 Fuse, 250 A, 1 Pole, Back Plate Mount	65011011
Fuse Base DFB Size 1 Fuse, 250 A, 1 Pole, DIN Rail Mount	65011111
Fuse Base DFB Size 2 Fuse, 400 A, 1 Pole, Back Plate Mount	65011012
Fuse Base DFB Size 2 Fuse,400 A, 1 Pole, DIN Rail Mount	65011112
Fuse Base DFB Size 3 Fuse, 630 A, 1 Pole, Back Plate Mount	65011013
Fuse Base DFB Size 3 Fuse, 630 A, 1 Pole, DIN Rail Mount	65011113

DFB DIN Fuse Bases Three Pole

DIN Fuse Bases Size 00 to 3, 3 Pole

Open Type

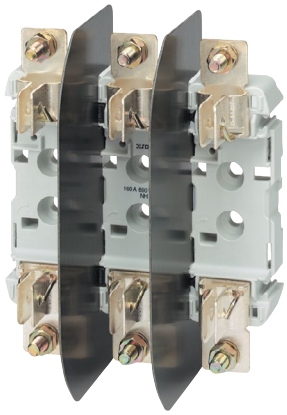

Item Description	Catalogue No.
Fuse Base DFB Size 00 Fuse, 160 A, 3 Pole, Back Plate Mount	65001030
Fuse Base DFB Size 00 Fuse, 160 A, 3 Pole, DIN Rail Mount	65001130
Fuse Base DFB Size 1 Fuse, 250 A, 3 Pole, Back Plate Mount	65011031
Fuse Base DFB Size 1 Fuse, 250 A, 3 Pole, DIN Rail Mount	65011131
Fuse Base DFB Size 2 Fuse, 400 A, 3 Pole, Back Plate Mount	65011032
Fuse Base DFB Size 2 Fuse, 400 A, 3 Pole DIN Rail Mount	65011132
Fuse Base DFB Size 3 Fuse, 630 A, 3 Pole, Back Plate Mount	65011033
Fuse Base DFB Size 3 Fuse, 630 A, 3 Pole, DIN Rail Mount	65011133

IP20 Kit Single Pole and Three Pole

IP20 Kit, includes connecting block, phase separation shield, terminal shrouds and fuse covers.



Item Description	Catalogue No.
IP20 Kit, 160 A, DIN Fuse Base, 1 Pole	65101010
IP20 Kit, 160 A, DIN Fuse Base, 3 pole	65101030
IP20 Kit, 250 A, DIN Fuse Base, 1 Pole	65111011
IP20 Kit, 250 A, DIN Fuse Base, 3 Pole	65111031
IP20 Kit, 400 A, DIN Fuse Base, 1 Pole	65111012
IP20 Kit, 400 A, DIN Fuse Base, 3 Pole	65111032
IP20 Kit, 630 A, DIN Fuse Base, 1 Pole	65111013
IP20 Kit, 630 A, DIN Fuse Base, 3Pole	65111033

DIN Fuse Accessories

Connecting Blocks

1 piece, 2 required to connect 3 fuse bases.



Item Description	Catalogue No.
DFB Connect Block 250 / 400 A	65000031
DFB Connect Block 630 A	65000032
DFB Connect Block 160 A	65000033

Fuse Covers

1 piece, 1 required per pole.



Item Description	Catalogue No.
Fuse DFB Cover 160 A	65000020
Fuse DFB Cover 250 / 400 A	65000022
Fuse DFB Cover 630 A	65000023

Phase Separation Shields

1 piece, 4 required for 3 fuse bases.

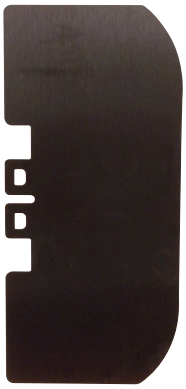

Item Description	Catalogue No.
Fuse DFB Phase Barrier 160 A	65000001
Fuse DFB Phase Barrier 250 / 400 A	65000003
Fuse DFB Phase Barrier 630 A	65000004

Terminal Shrouds

1 piece, 2 required per pole.



Item Description	Catalogue No.
Fuse DFB Terminal Shroud 160 A	65000010
Fuse DFB Terminal Shroud 250 A	65000012
Fuse DFB Terminal Shroud 400 A	65000013
Fuse DFB Terminal Shroud 630 A	65000014

DIN Fuse Bases 160 to 630 A

IP20 Kit Assembly

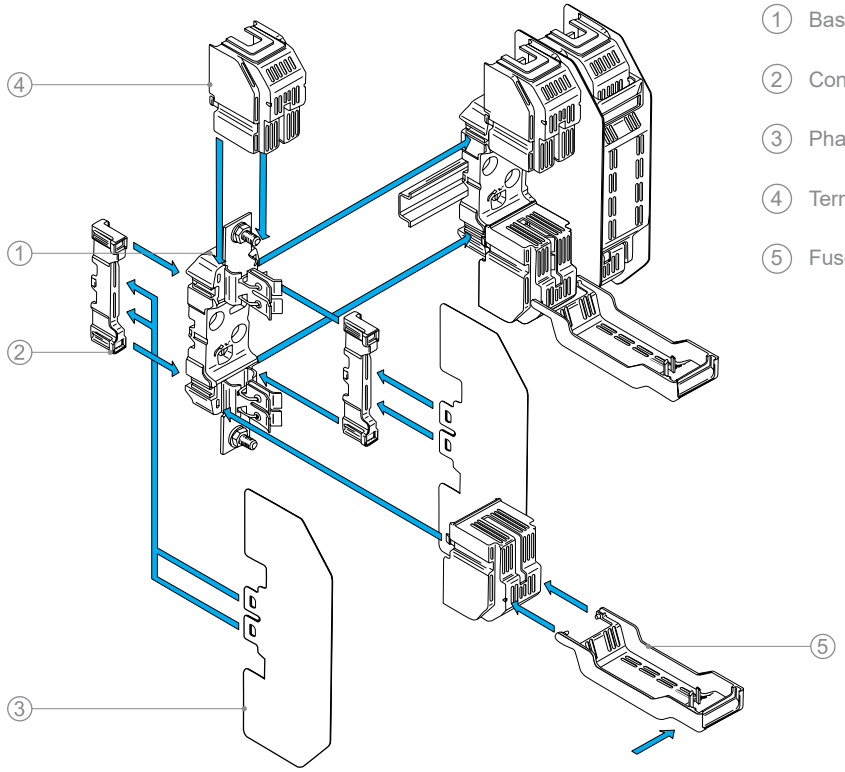

1. Base
2. Connectng
3. Phase separation shield
4. Terminal shield
5. Fuse cover

Dimensions (mm)

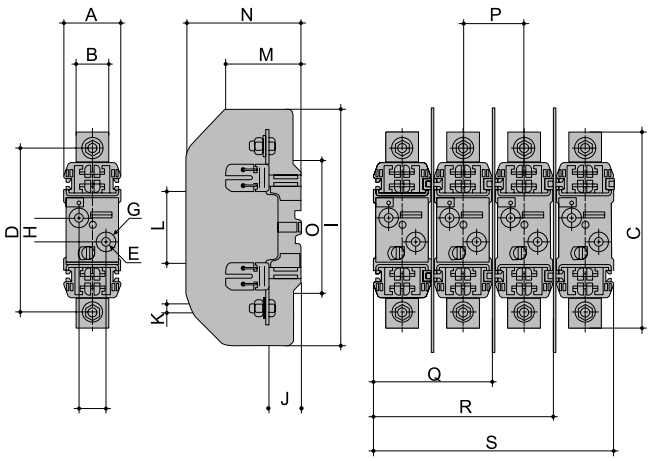

Rating (A)	Fuse Size	A	B	C	D	E	F	G	H	I	J	K	L	M	N	O	P	Q	R	S
160	00	37	20	120.5	100	15	0	7.5	25	146	23	M8	56.5	58	84.5	86	38.5	75.5	114	152.5
250	1	60	28	200	175	10.5	30	20.5	25	250	35	M10	80	77.5	123	148	66	121.5	192	244.5
400	2	60	32	225	200	10.5	30	20.5	25	250	35	M12	80	88	123	148	66	12.5	192	244.5
630	3	60	38	240	210	10.5	30	20.5	25	270	35	M12	80	97	143	148	82	121.5	224	244.5

DIN Fuse Switch Disconnect - Panel Mount



- ✔ Suits DIN-NH fuse links 2 to 630 A
- ✔ 3-pole switching
- ✔ AS/NZS 60947-3, EN 60947-3 / IEC 60947-3
- ✔ Fuses have mechanical retention in disconnector lid
- ✔ Front-side degree of protection IP30, degree of protection depends on installation
- ✔ Test opening in disconnector lid self -closing
- ✔ Recommended mounting position: handle at top

CE

General

Un, Nominal Operational Voltage, AC	690	V AC
Ue, Rated Operational Voltage, AC	690	V AC
Ue, Rated Operational Voltage, DC, Max	400 / 440	V DC
Uimp, Impulse Withstand Voltage	8	kV
Rated Peak Withstand Current	80	kA
Maximum Operating Temperature With Derating	70	°C max
IP Rating	IP30	
Standards Compliance	IEC 60947-1 IEC 60947-3 EN 60947-3 IEC 60269-2-1 DIN VDE 0636-2	
Certifications	CE	
Service Information	Product is not repairable. Please contact your local NHP sales representative for assistance.	

Dimensions for Fuse Switch Disconnector (MBP-000-100A-3P) (mm)

main dimensions

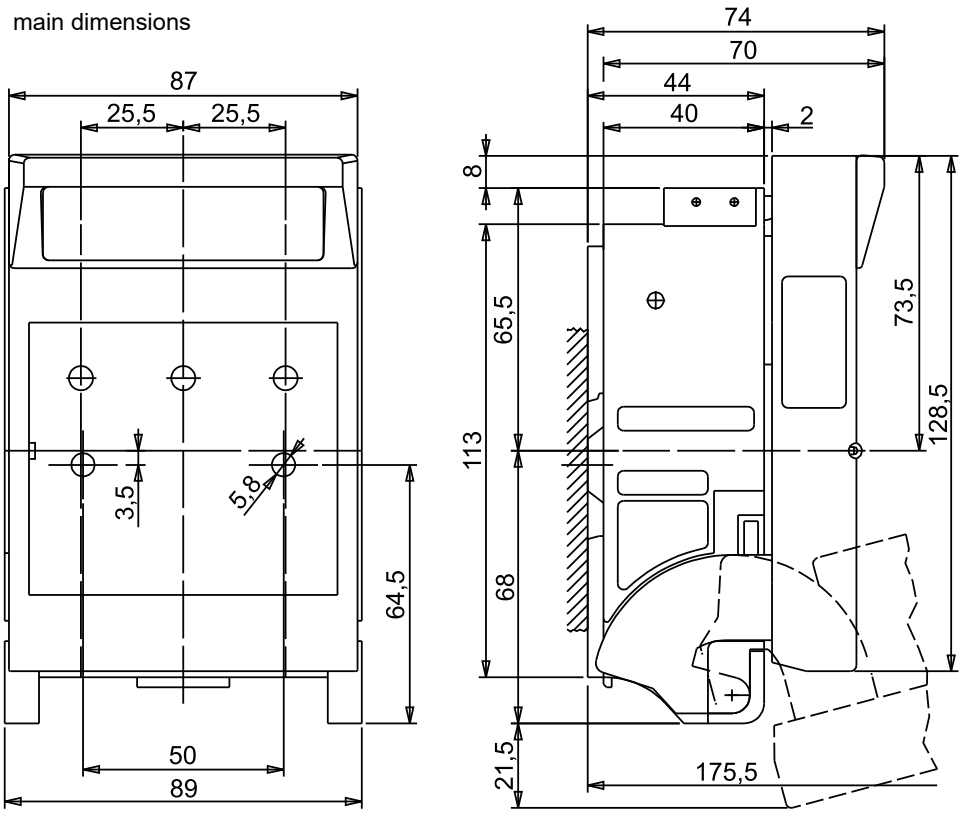

mounting on DIN rails

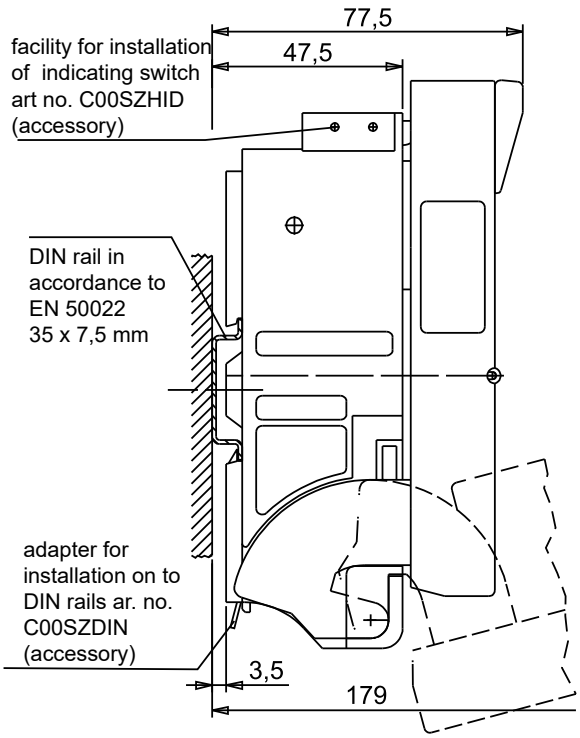

Dimensions for Fuse Switch Disconnector (MBP-00-160A-3P) (mm)

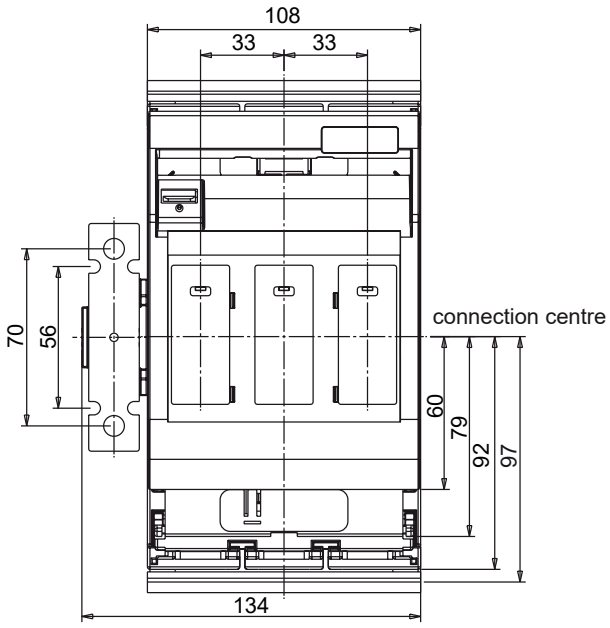

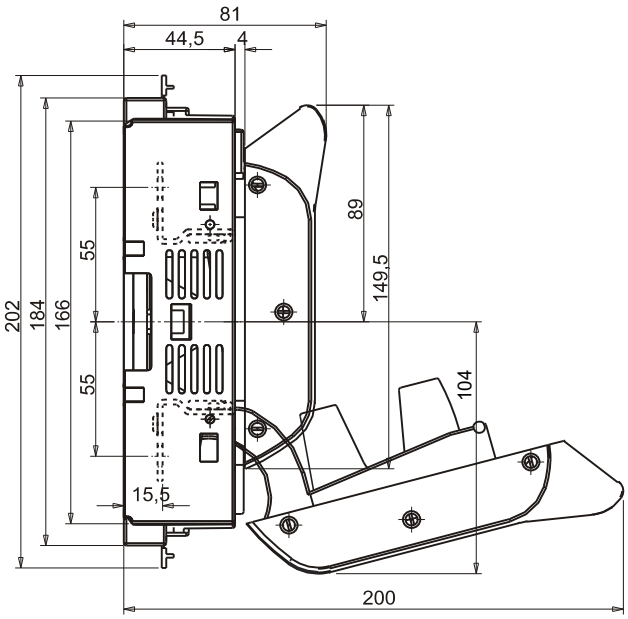

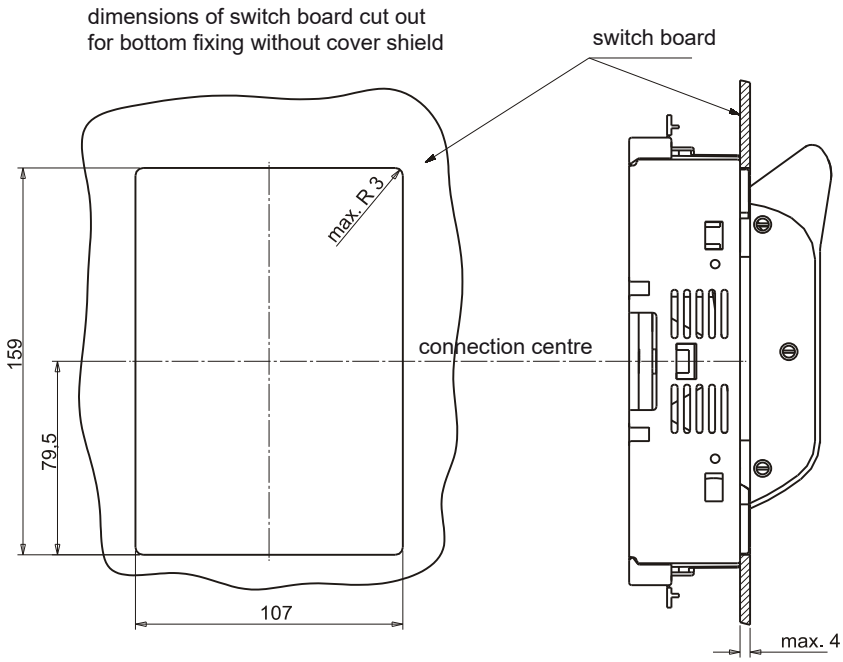

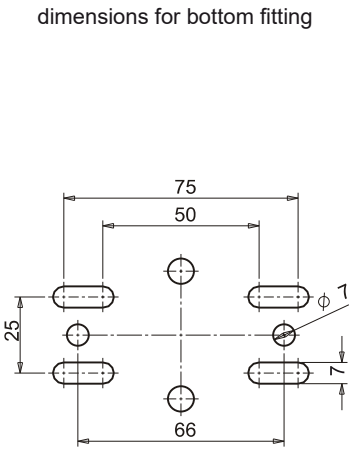

Dimensions for Fuse Switch Disconnector (MBP-1-250A-3P) (mm)

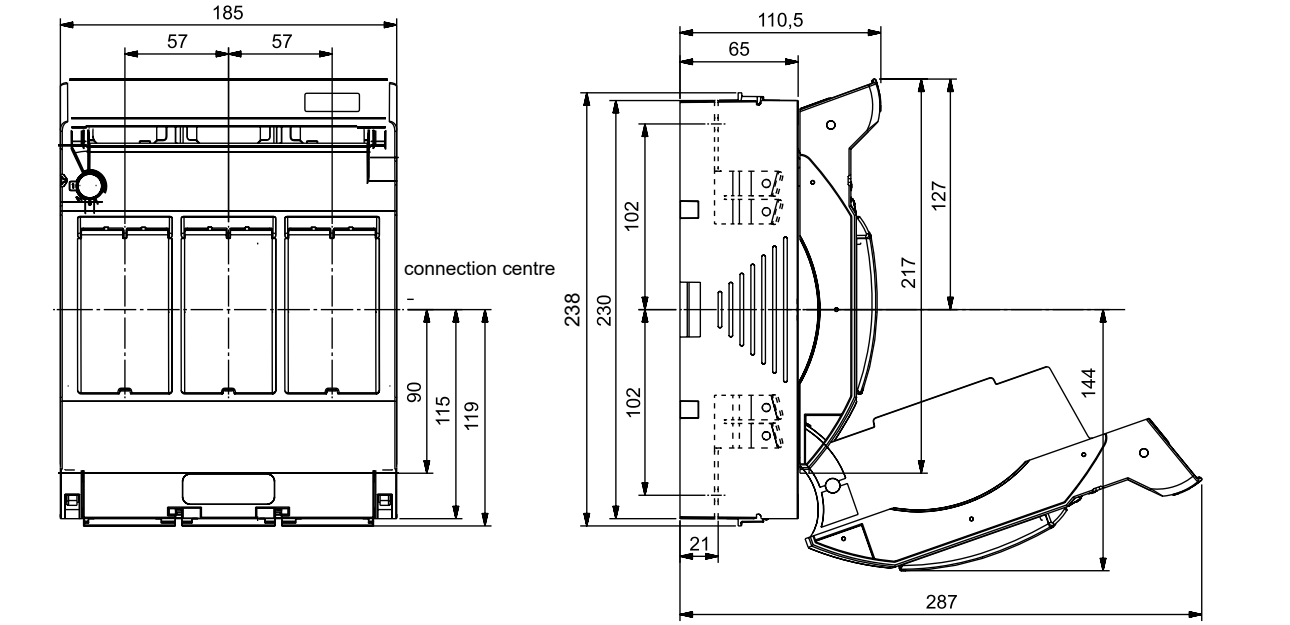

dimensions of switch board cut out
for bottom fixing without cover shield

max. thickness
of switch board 2mm

dimensions for bottom fitting

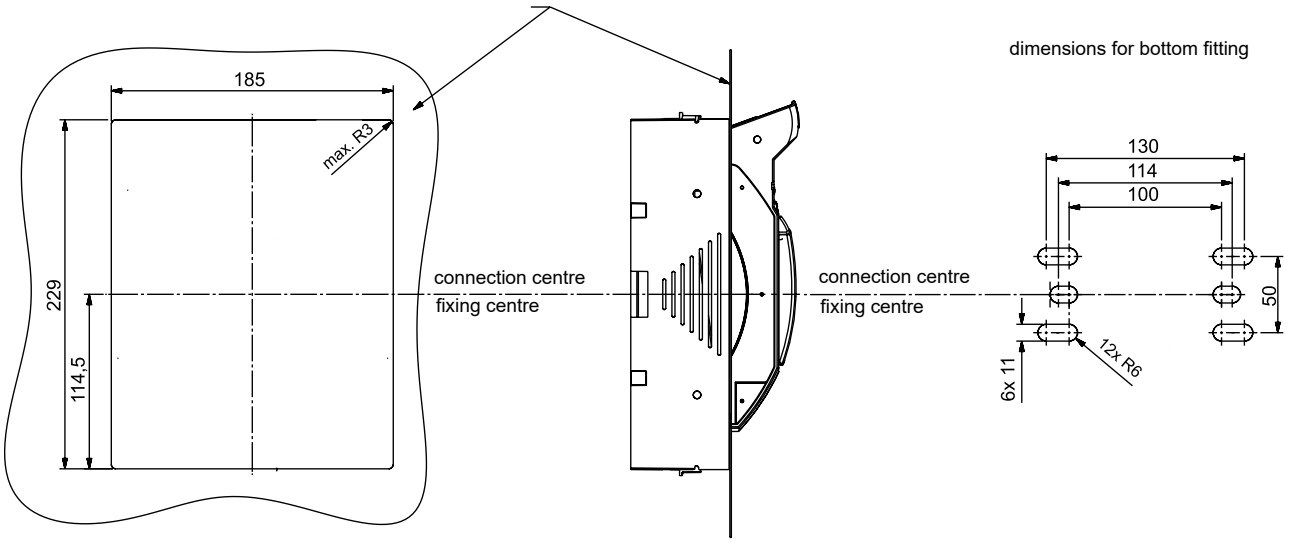

Dimensions for Fuse Switch Disconnector (MBP-2-400A-3P) (mm)

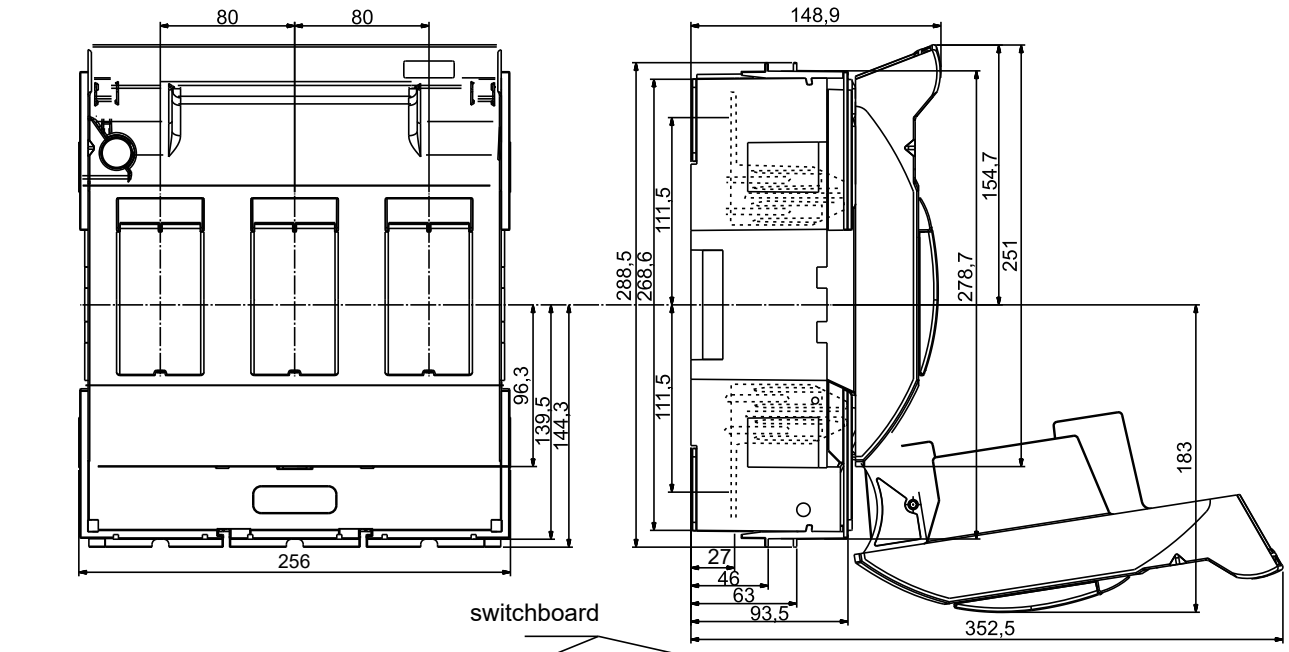

switchboard

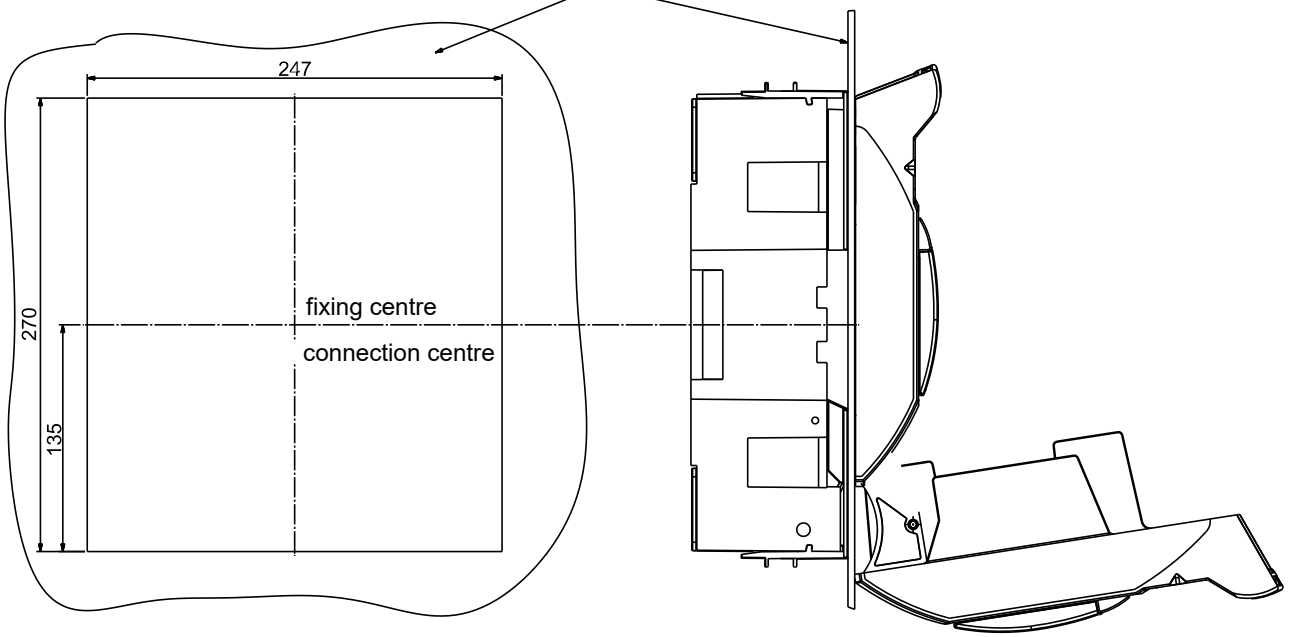

dimensions for bottom fitting

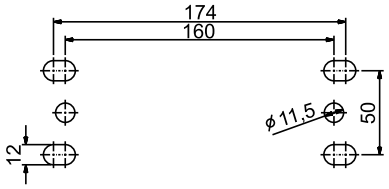

Dimensions for Fuse Switch Disconnector (MBP-3-630A-3P) (mm)

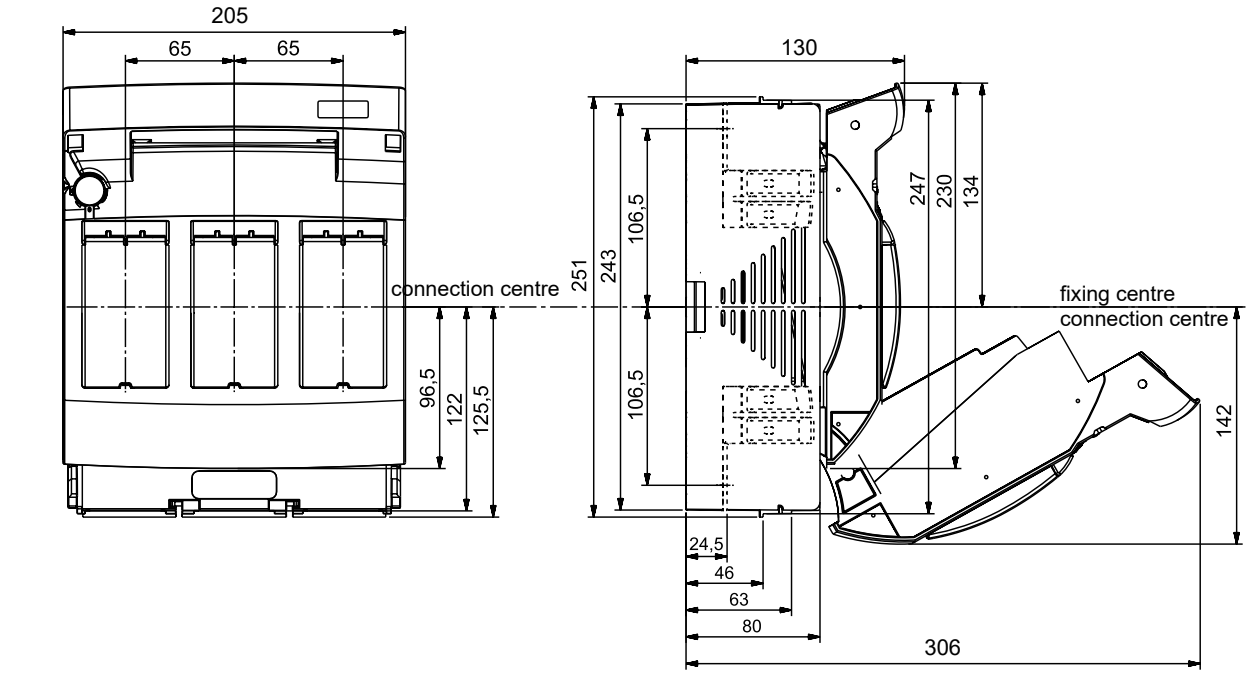

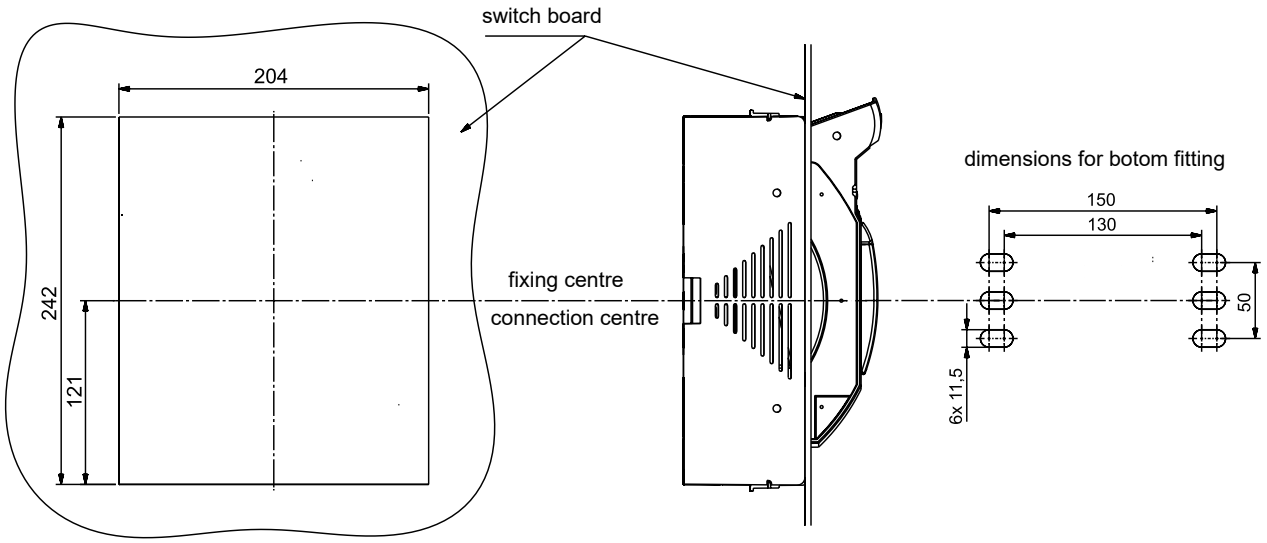

Panel Mount Fuse Switch



Fuse Rating (A)	Cartridge (Size)	Flexible Cable (Max)	Catalogue No.
125	000	50 mm^2	MBP-000-100A-3P
160	00	70 mm^2	MBP-00-160A-3P
250	1	120 mm^2	MBP-1-250A-3P
400	2	240 mm^2	MBP-2-400A-3P
630	3	240 mm^2	MBP-3-630A-3P

Ratings Chart

NHP Part Number	MBP000100A3P	MBP00160A3P	MBP1250A3P	MBP2400A3P	MBP3630A3P
Number of poles/phases	3	3	3	3	3
Size	000	00	1	2	3
Conventional free air thermal current with NH-fuse links I_{th}	100 A	160 A	250 A	400 A	630 A
Max. power dissipation of fuse links P_n	7,5 W	12 W	23 W	34 W	48 W
Conventional free air thermal current with solid links I_{th}	100 A	200 A	400 A	630 A	780 A
Max. power dissipation of solid links P_n	1,2 W	1,2 W	2,6 W	9 W	17,5 W
Utilisation category to IEC/EN 60947-3	AC 22 B	–	–	–	–
	AC 21 B	–	–	–	–
U_e = AC 400 V; I_e = 250 A	–	AC 23 B	AC 23 B	AC 23 B	AC 23 B
U_e = AC 500 V; I_e = 250 A	–	AC 22 B	AC 22 B	AC 22 B	AC 22 B
U_e = AC 690 V; I_e = 200 A	–	AC 21 B	AC 21 B	AC 21 B	AC 21 B
U_e = DC 220 V; I_e = 250 A	–	DC 22 B	–	DC 21 B	–
U_e = DC 440 V; I_e = 250 A	–	DC 21 B	DC 21 B	–	–
Rated operational voltage U_e	690 V	690 V	690 V	690 V	690 V
Rated insulation voltage U_i	690 V	1000 V	1000 V	1000 V	1000 V
Rated impulse withstand voltage U_{imp}	6 kV	8 kV	12 kV	12 kV	12 kV
Rated frequency	50 ... 60 Hz	50 ... 60 Hz	50 ... 60 Hz	50 ... 60 Hz	50 ... 60 Hz
Degree of protection	IP 20	IP 30	IP 20	IP 20	IP 20
Degree of pollution	3	3	3	3	3
Rated conditional short-circuit current with fuse links	80 kA	–	–	–	–
U_e = AC 400 V; I_e = 250 A	–	80 kA	80 kA	80 kA	80 kA
U_e = AC 500 V; I_e = 250 A	–	80 kA	50 kA	80 kA	80 kA
U_e = AC 690 V; I_e = 200 A	–	80 kA	50 kA	80 kA	50 kA
Rated short circuit making capacity with solid links Icm		6.2 kAsw	8.2 kAsw	10.6 kAsw	18.6 kAsw
Rated short-time withstand current Icw		4 kA / 1 s	8 kA / 1 s	13 kA / 1 s	18 kA / 1 s
Power dissipation by I_{th} without NH-fuse links		11 W	13 W	27 W	53 W
Power dissipation by I_{th} 400 A without solid links	7 W	17 W	33 W	67 W	81 W
Installation mode	bottom fitting	bottom fitting	bottom fitting	bottom fitting	bottom fitting
Cable terminal connection					
Standard cable terminal	–	M8	M10	M10	M12
for cable lugs Cu max.	–	2 x 70 mm²	2 x 150 mm²	2 x 185 mm²	2 x 240 mm²
for cable lugs Al max.	–	2 x 70 mm²	2 x 185 mm²	2 x 240 mm²	2 x 300 mm²
for copper bars with max. dimensions	–	20 x 5 mm	30 x 10 mm	35 x 10 mm	45 x 10 mm

DIN Fuse Switch Disconnect - Busbar Mount



- ✔ Suits DIN-NH fuse links 2 to 250 A
- ✔ 3-pole switching
- ✔ AS/NZS 60947-3, EN 60947-3 / IEC 60947-3
- ✔ Fuses have mechanical retention in disconnector lid
- ✔ Front- side degree of protection IP30, degree of protection depends on installation
- ✔ Test openings in disconnector lid self-closing
- ✔ Recommended mounting position: handle at top
- ✔ 60 mm system (fuse sizes 000, 00, 1, 2, 3)
- ✔ Screwless busbar connection, locks on and makes contact easily and securely

CE

General

Un, Nominal Operational Voltage, AC	690	V AC
Ue, Rated Operational Voltage, AC	690	V AC
Ue, Rated Operational Voltage, DC, Max	440	V DC
Uimp, Impulse Withstand Voltage	6	kV
Rated Peak Withstand Current	80	kA
IP Rating	IP30	
Standards Compliance	IEC 60947-3 EN 60947-3 IEC 60269-2-1 DIN VDE 0636-2	
Certifications	CE	
Service Information	Product is not repairable. Please contact your local NHP sales representative for assistance.	

Dimensions for Fuse Switch Disconnector (MBB-000-100A-3P) (mm)

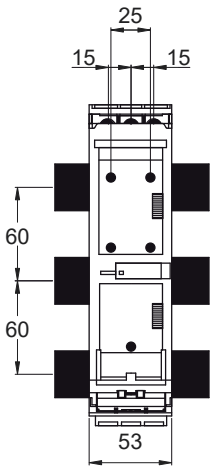

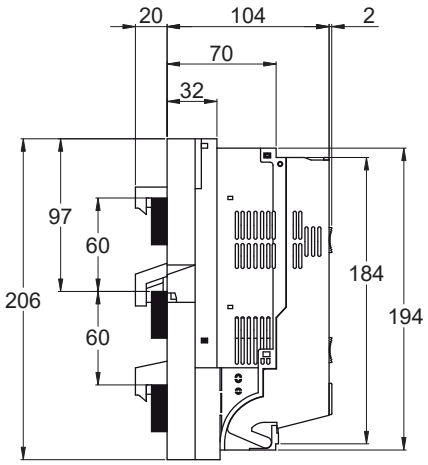

cover for cable terminal connection
Art. Nr. 1.002.644
(accessory)

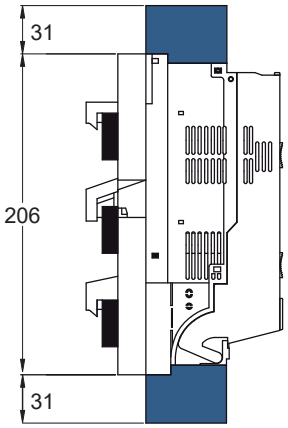

Dimensions for Fuse Switch Disconnector (MBB-00-160A-3P) (mm)

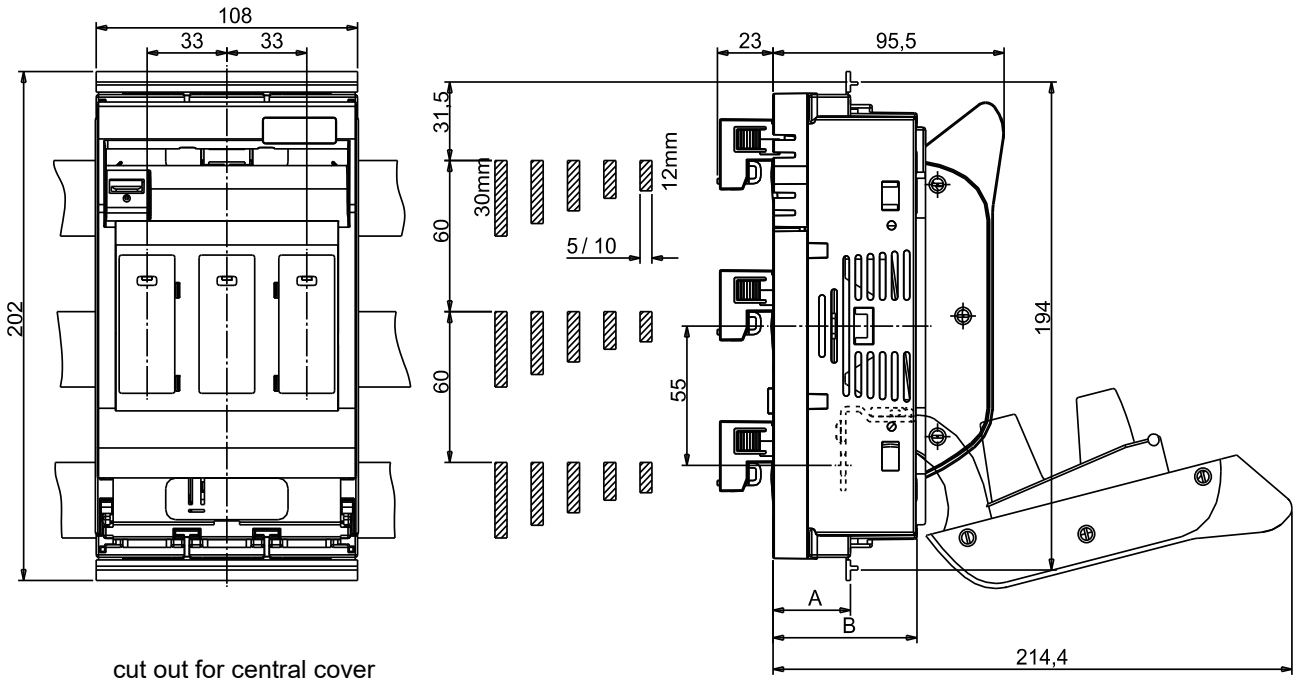

cut out for central cover

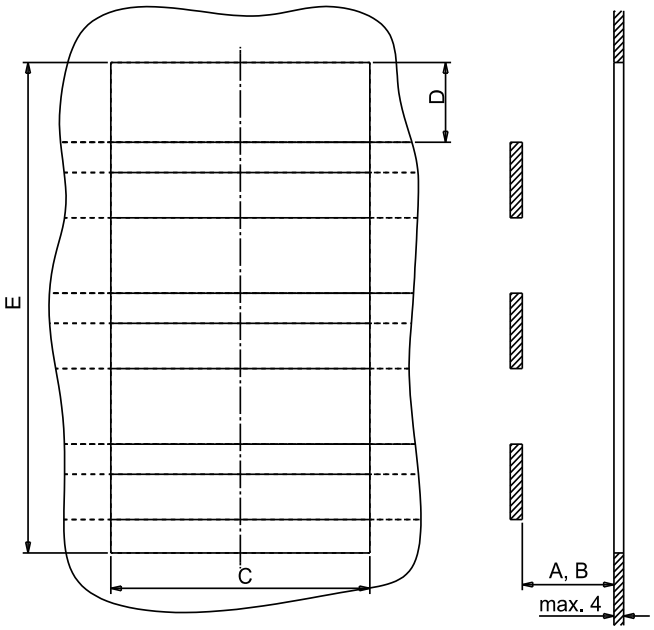

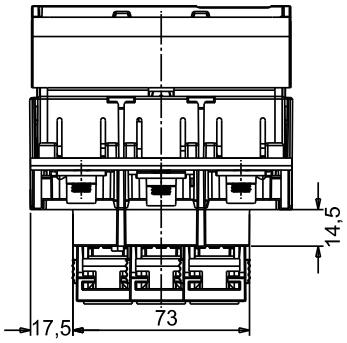

installation depth		cut out		
		C	D	E
A	32	109	31,5	195
B	60	107	13,5	159

Dimensions for Fuse Switch Disconnector (MBB-1-250A-3P) (mm)

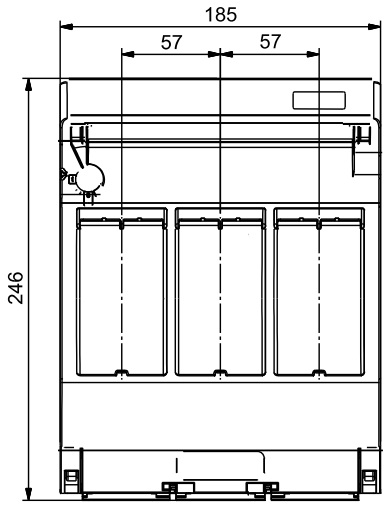

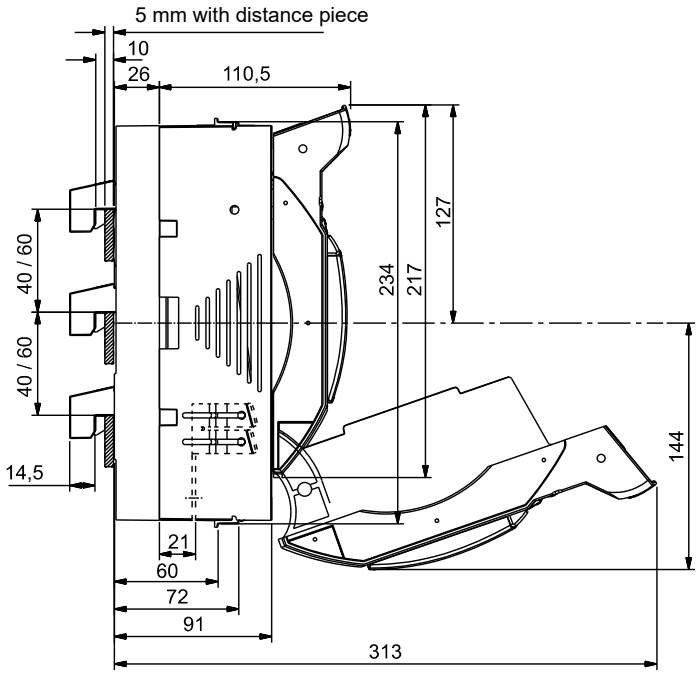

switch board cut out

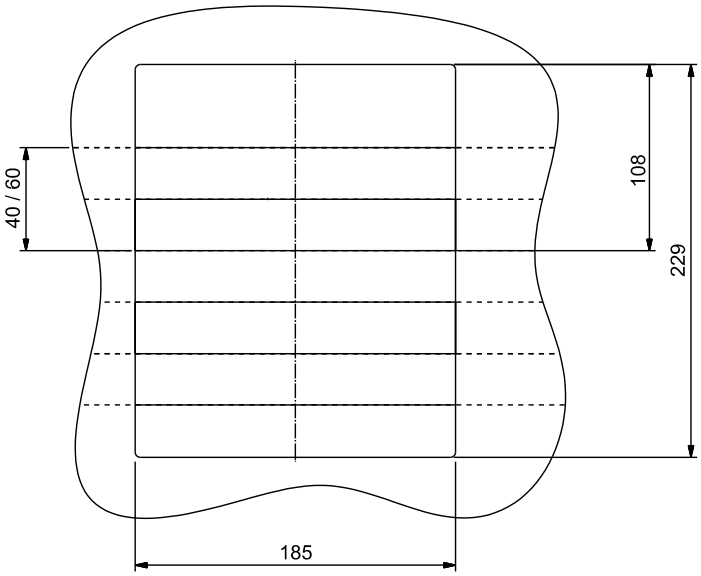

Busbar Mount



Fuse Rating (A)	Cartridge (Size)	Flex Cable (Max)	H x W x D (mm)	Catalogue No.
125	000	50 mm^2	200 x 89 x 97	MBB-000-100A-3P
160	00	70 mm^2	200 x 106 x 97	MBB-00-160A-3P
250	1	120 mm^2	243 x 184 x 129	MBB-1-250A-3P

Rating Table for Panel Mount Version

For Fuse Link Sizes	000	00	1	2	3
Type of Current	AC (50 - 60 Hz) DC	AC (50 - 60 Hz) DC	AC (50 - 60 Hz) DC	AC (50 - 60 Hz) DC	AC (50 - 60 Hz) DC
Rated Operating Voltage (U_e)	690 V AC	690 V AC	690 V AC	690 V AC	690 V AC
	440 V DC	440 V DC	440 V DC	440 V DC	440 V DC
Rated Insulation Voltage (U_i)	800 V	800 V	800 V	800 V	800 V
Rated Surge Withstand Capacity (U_{imp})	6 kV	6 kV	6 kV	6 kV	6 kV
Max. Rated Operating Current (I_e)	125 A	160 A	250 A	400 A	630 A
Conditional Rated Short-Circuit Current	50 kA	50 kA	80 kA	50 kA	50 kA
For VDE 0636-2 NH Fuses of All Operating Classes With Power Dissipation Per Phase	9 W	12 W	23 W	34 W	48 W

Fuse Switch Disconnector for Busbar Mount

For Fuse Link Sizes	00	1
Type of Current	AC (50 - 60 Hz) DC	AC (50 - 60 Hz) -
Rated Operational Voltage (U_e)	690 V AC, 440 V DC	690 V AC
Rated Insulation Voltage (U_i)	800 V AC	800 V AC
Rated Surge Withstand Capacity (U_{imp})	6k V	6k V
Max. Rated Operating Current (I_e)	125 A	250 A
Conditional Rated Short-Circuit Current Using gG Fuse Links	50 kA size 00; 125 A - 690 V	50 kA size 1; 250 A - 690 V
For VDE 0636-2 NH Fuses of All Operating Classes With Power Dissipation Per Phase	10 W	23 W

Auxiliary Contacts

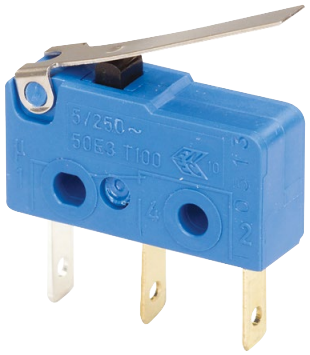

Item Description	Catalogue No.
Pilot Switch LID Position Size 000/00/2/3 Fuse Disconnect	MBPSW

Shrouds for Cable Lugs

Top or bottom mount terminal covers.



Item Description	Catalogue No.
Busbar Mount Cable Lugs Shroud Size 00	MBBCS003P



Item Description	Catalogue No.
Base Mount Cable Shroud Suits Size 1 3P	MBBCS13P
Base Mount Cable Shroud Suits Size 2 3P	MBBCS23P
Base Mount Cable Shroud Suits Size 3 3P	MBBCS33P

Termination Options

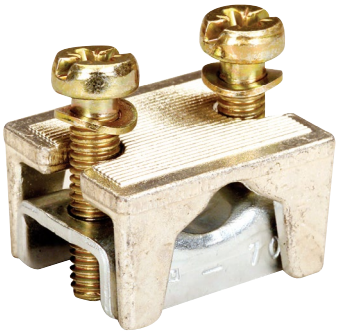

Item Description	Catalogue No.
Wedge Clamp size 1 single each	MBCC1
Wedge Clamp size 2 single each	MBCC2
Wedge Clamp size 3 single each	MBCC3

DIN-NH Standard Switch Fuses (20 to 1250 A)



- ✔ 90-degree rotatory open-close. Supplied with handle and shaft for external operation
- ✔ Handles and switch fuse bodies both include a padlock facility to lock OFF the switch for lockout tagout (LOTO) insolation
- ✔ Suits DIN-NH fuse links 20 to 1250 A
- ✔ 100 kA fault rating
- ✔ 690 V AC rated
- ✔ Double breaking per pole (top and bottom) for isolated fuse removal
- ✔ Positive break indication
- ✔ TEST position for testing control circuits without energising the power poles using U-type auxiliary contacts
- ✔ Option: Fuse Monitoring Device for remote blown fuse indication
- ✔ Front Operated, Base mount
- ✔ Supplied wih external handle and 320 mm shaft
- ✔ IP30
- ✔ Base Mounting

General

Un, Nominal Operational Voltage, AC	690	V AC
Ue, Rated Operational Voltage, AC	690	V AC
Ue, Rated Operational Voltage, DC, Max	440	V DC
Uimp, Impulse Withstand Voltage	8 - 12	kV
Rated Peak Withstand Current 550 V	80	kA
Maximum Operating Temperature With Derating	70	°C max
IP Rating	IP30 (using shrouds)	
Standards Compliance	IEC 60947-3 AS/NZS 60947-3 IEC 60269-2-1 DIN 43620-3 AS 60269.2.1	
Certifications	CCC KEMA	
Service Information	Product is not repairable. Please contact your local NHP sales representative for assistance.	

Dimensions for SSF BS (63 A) and DIN (63 A) Switch Fuses (mm)

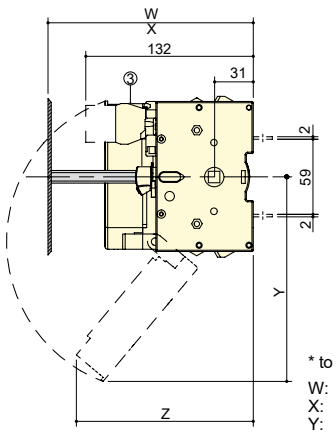

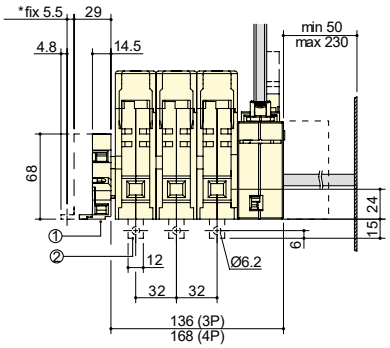

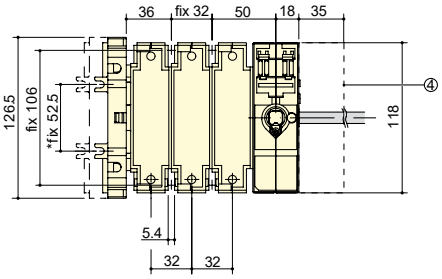

* to use if pre-break auxiliary contact number > 4

W: 124 + N x 23.5 for BS; 139 for DIN
X: 145 + N x 23.5 for BS; 145 for DIN
Y: 159 only for DIN
Z: 145 only for DIN

① S type auxiliary contact N/O + N/C to use if block number > 4.
② Rear connection (option).
③ 1 to 4 pre-break auxiliary contact for signalling.
④ Additonal contact holder for U type AC.

Door drilling

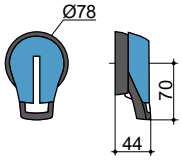

S1 handle

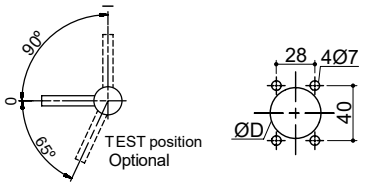

S type handle – front operation

Conventional fixing (from rear): D = 31 to 37 mm
Fast fixing (external, door closed): D = 37 mm

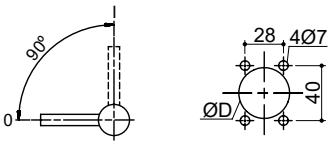

S type handle – side operation

Conventional fixing (from rear): D = 31 to 37 mm
Fast fixing (external, door closed): D = 37 mm

Dimensions for SSF BS (100 A) and DIN (125 A) Switch Fuses (mm)

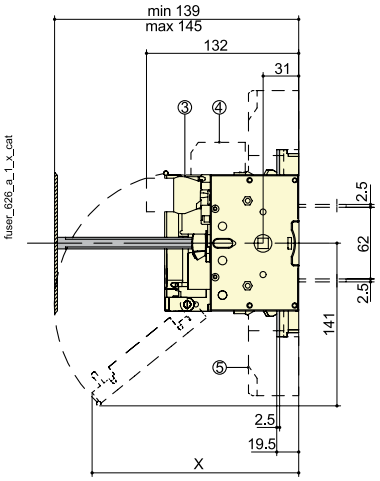

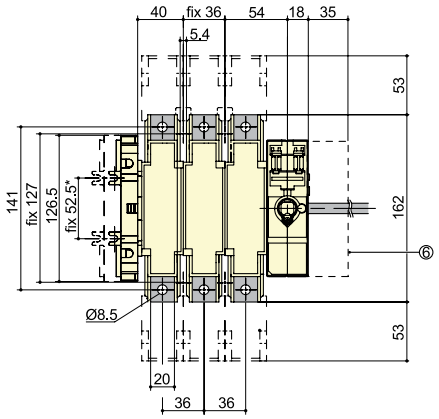

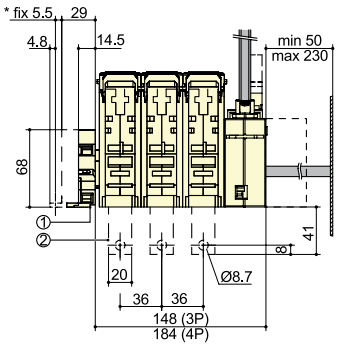

* to use if pre-break auxiliary contact number > 4
X: 179 for BS88 / NFC and DIN 100 to 125 A
189 for NFC and DIN 125 to 160 A

① S-type auxiliary contact NO + NC to use if block number > 4
② Rear connection (option)
③ 1 to 4 pre-break auxiliary contact for signalisation
④ 1 or 2 pre-break auxiliary contact (fuse blown indication)
⑤ Terminal shrouds
⑥ Additional contact holder for U-type AC

Dimensions for SSF BS (160 A) and DIN (160 A) Switch Fuses (mm)

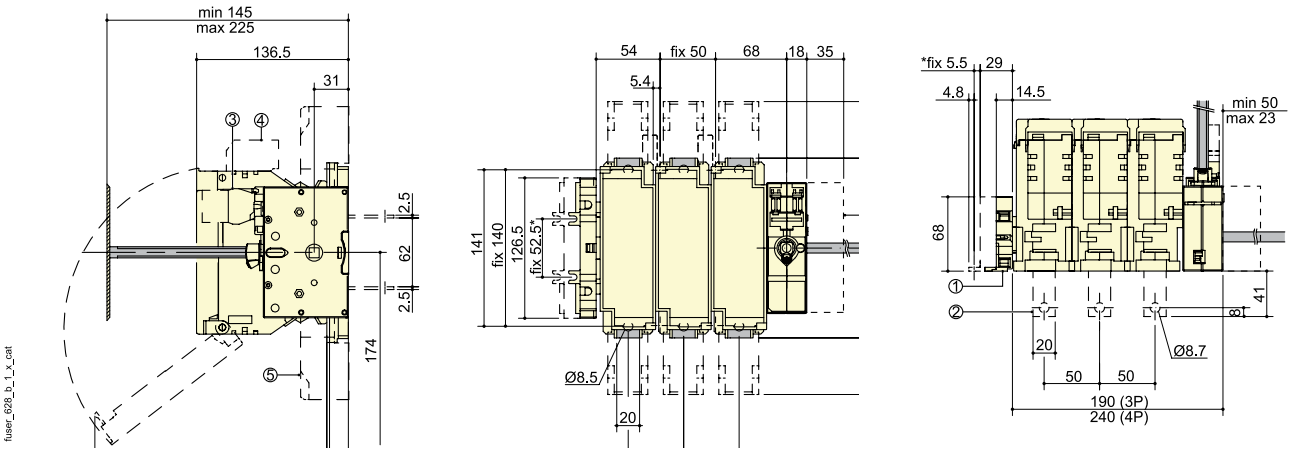

* to use if pre-break auxiliary contact number > 4
① S-type auxiliary contact NO + NC to use if block number > 4
② Rear connection (option)
③ 1 to 4 pre-break auxiliary contact for signalisation
④ 1 or 2 pre-break auxiliary contact (fuse blown indication)
⑤ Terminal shrouds
⑥ Additional contact holder for U-type AC

Dimensions for SSF BS (200 - 250 A) and DIN (250 A) Switch Fuses (mm)

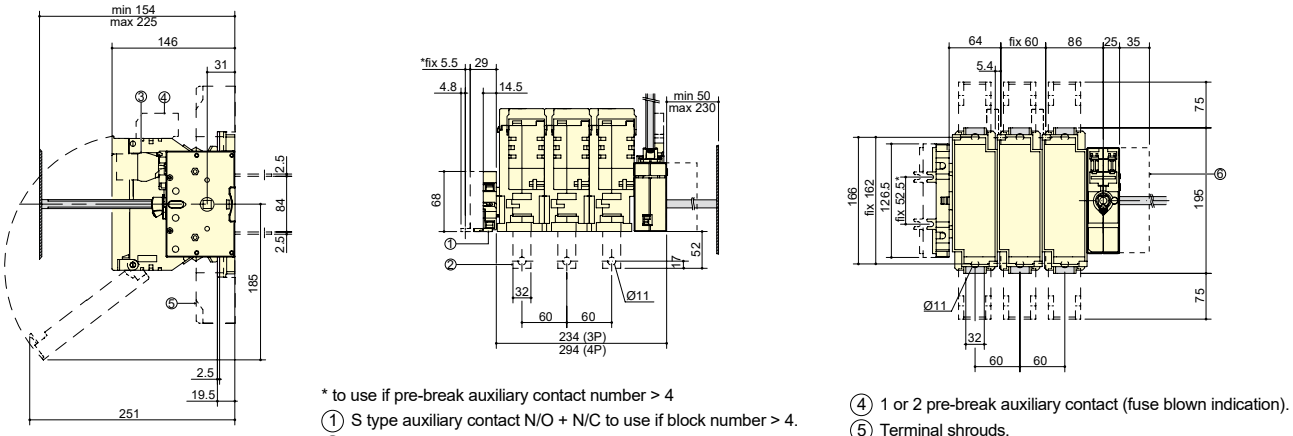

* to use if pre-break auxiliary contact number > 4
① S type auxiliary contact N/O + N/C to use if block number > 4.
② Rear connection (option).
③ 1 to 8 pre-break auxiliary contact for signalling.
④ 1 or 2 pre-break auxiliary contact (fuse blown indication).
⑤ Terminal shrouds.
⑥ Additional contact holder for U type AC.

Door drilling

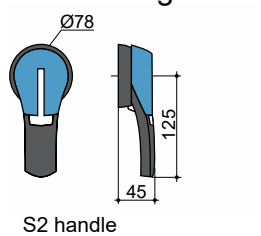

S2 handle

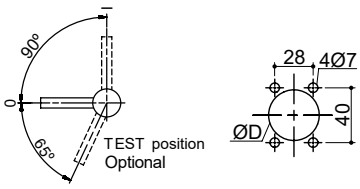

S type handle – front operation

Conventional fixing (from rear): D = 31 to 37 mm
Fast fixing (external, door closed): D = 37 mm

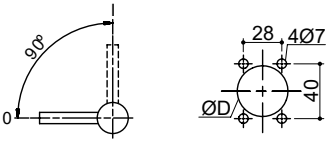

S type handle – side operation

Conventional fixing (from rear): D = 31 to 37 mm
Fast fixing (external, door closed): D = 37 mm

Dimensions for SSF BS (315 - 400 A) and DIN (400 A) Switch Fuses (mm)

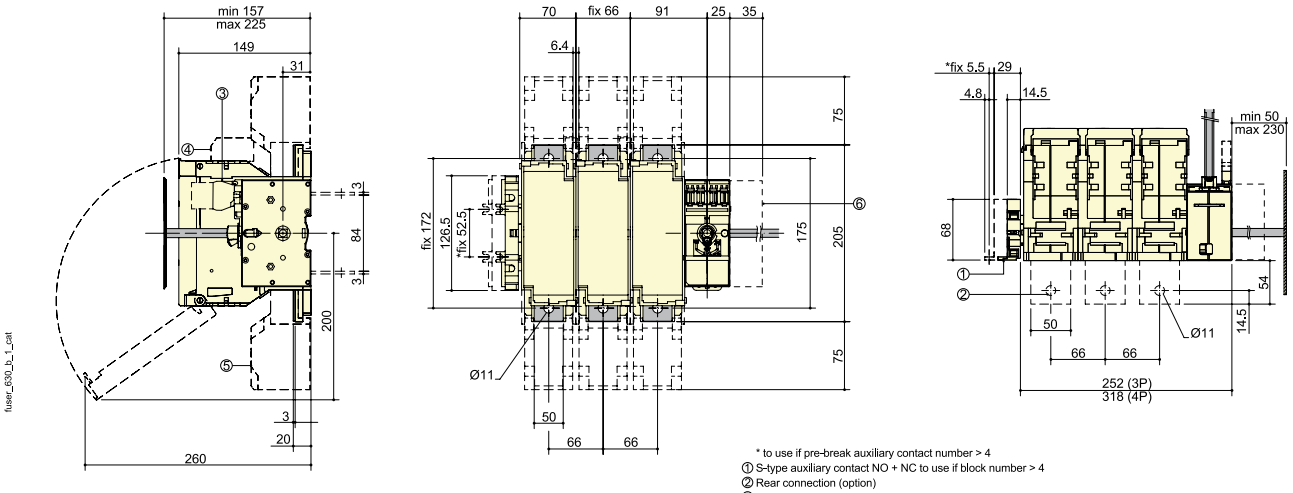

* to use if pre-break auxiliary contact number > 4
① S-type auxiliary contact NO + NC to use if block number > 4
② Rear connection (option)
③ 1 to 8 pre-break auxiliary contact for signalisation
④ 1 or 2 pre-break auxiliary contact (fuse blown indication)
⑤ Terminal shrouds
⑥ Additional contact holder for U-type AC

Dimensions for SSF BS (630 - 800 A) and DIN (630 - 800 A) Switch Fuses (mm)

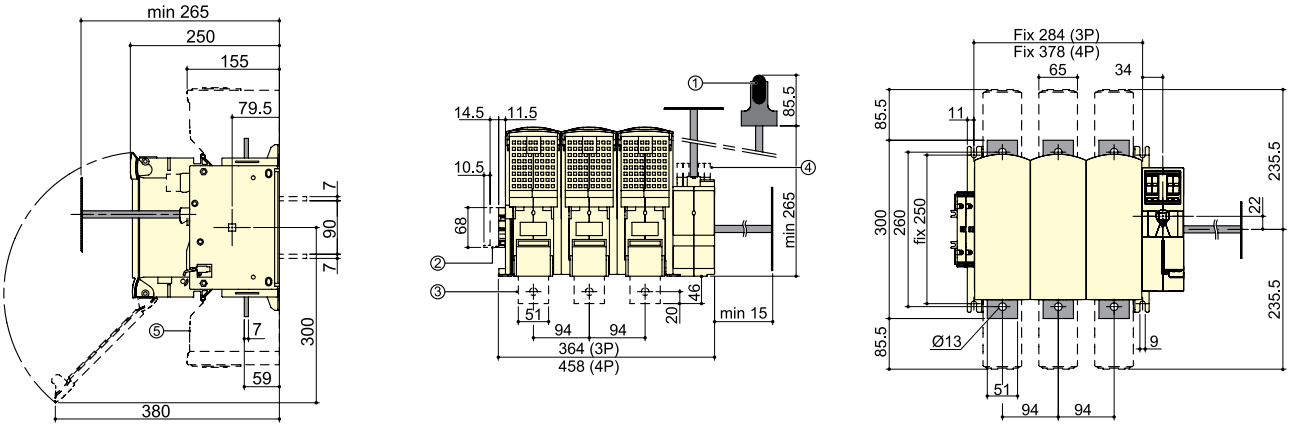

* to use if pre-break auxiliary contact number > 4

① Direct operation.
S type auxiliary contact N/O + N/C.

② Rear connection (option).

④ 1 to 8 pre-break auxiliary contact for signalling.

⑤ Terminal shrouds.

Dimensions for SSF BS (1250 A) and DIN (1250 A) (mm)

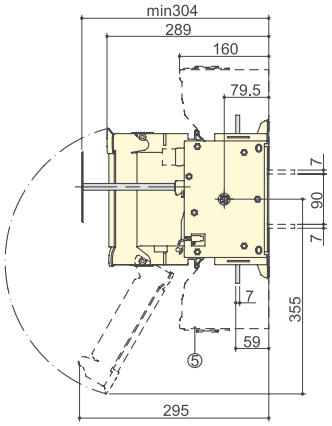

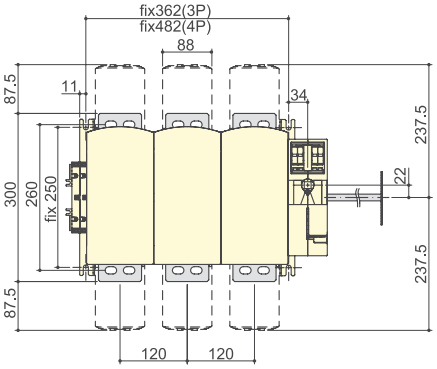

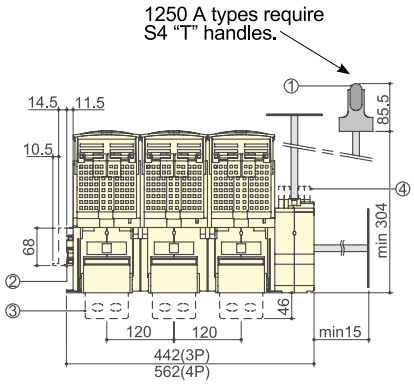

Direct operation

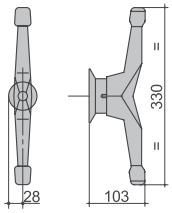

Connection terminals

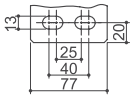

① Direct operation
② S type auxiliary contact N/O + N/C
③ Rear connection (option)
④ 1 to 8 pre-break auxiliary contact for signalling
⑤ Terminal shrouds

DIN-NH Standard Switch Fuses (20 to 1250 A)

Front operated, base mount (supplied with external handle and 320 mm shaft)

Fuse Rating (A)	DIN Cartridge Size	No. of Poles	AC - 21A (A @ 400 V)	AC - 23A (A @ 400 V)	AC - 23A (kW @ 400 V)	Catalogue No.
63	00	3	63	63	30	SSFDN633P
125	00	3	125	125	63	SSFDN1253P
160	00	3	160	160	80	SSFDN1603P
250	1	3	250	250	132	SSFDN2503P
400	2	3	400	400	220	SSFDN4003P
630	3	3	630	630	355	SSFDN6303P
800	3	3	800	800	450	SSFDN8003P
1250	4	3	1250	1000	560	SSFDN12503P
63	00	4	63	63	30	SSFDN634P
125	00	4	125	125	63	SSFDN1254P
160	00	4	160	160	80	SSFDN1604P
250	1	4	250	250	132	SSFDN2504P
400	2	4	400	400	220	SSFDN4004P
630	3	4	630	630	355	SSFDN6304P
800	3	4	800	800	450	SSFDN8004P
1250	4	4	1250	1000	560	SSFDN12504P

General (20 - 160 A)

				20 A	32C A	32 A	63 A	100 A	125 A	160 A	160 A
DIN or BS Fuse Types				BS	BS	BS	DIN / BS	BS	DIN	BS	DIN
Fuse Types, gG General Purpose AS 60269.2.1:2005, AS/NZS 60269.2.1:2001	DIN 43620	–	–	–	–	–	00C	–	0	–	0
	BS 88	–	–	A1	A1	A1	A2 - A3	A4	–	B1 - B2	–

Ratings Data (20 - 160 A)

				20 A	32C A	32 A	63 A	100 A	125 A	160 A	160 A
Rated Insulation Voltage	–	–	V	800	800	750	750	750	750	750	750
Rated Impulse Withstand Voltage	–	–	kV	8	8	8	8	8	8	8	8
AC Rated Operational Current	AC 21 A	400 V	A	20	32	32	63	100	125	160	160
		690 V	A	20	32	32	63	100 [1]	125 [1]	160 [1]	160 [1]
	AC 22 A	400 V	A	20	32	32	63	100	125	160	160
		690 V	A	20	32	32	63	100 [1]	125 [1]	160 [1]	160 [1]
	AC 23 A	400 V	A	20	32	32	63	100	125	160	160
		690 V	A	20	32	32	63	100 [1]	100 [1]	125 [1]	125 [1]
DC Rated Operational Current / Poles in Series	DC 21 A	220 V	A	–	–	32	63	100	125	160	160
		440 V	A	–	–	32 [2]	63 [2]	100 [2]	125 [2]	160 [2]	160 [2]
	DC 22 A	220 V	A	–	–	32	63	100	125	160	160
		440 V	A	–	–	32 [2]	63 [2]	100 [2]	125 [2]	160 [2]	160 [2]
	DC 21 A	220 V	A	–	–	32	40	100	100	125	125
		440 V	A	–	–	32 [2]	40 [2]	100 [2]	100 [2]	160 [2]	125 [2]
Operational Power	Without Pre-break AC	440 V	kW	9	15	15	30	51	63	80	80
	Without Pre-break AC	690 V	kW	15	25	25	55	90	90	110	110
Rated Capacitor Power	–	–	kVAr	8	15	15	28	45	55	75	75

Notes

1) With terminal shrouds/screen.

2) 4 pole device with 2 poles in series by polarity.

240 / 415 V ratings suitable for use on 230 / 400 V in accordance with AS 60038: 2012.

Ratings to AS/NZS 60947-3 and IEC 60947-3

General (200 - 1250 A)

				200 A	250 A	315 A	400 A	630 A	800 A	1250 A
DIN or BS Fuse Types				BS	DIN / BS	BS	DIN / BS	DIN / BS	DIN / BS	DIN /BS
Fuse Types, gG General Purpose AS 60269.2.1:2005, AS/NZS 60269.2.1:2001	DIN 43620	–	–	–	1	–	2	3	3	4
	BS 88	–	–	B1, B2	B1, B2, B3	B1, B2, B3	B1, B2, B3, B4	C1, C2	C1, C2, C3	D1

Ratings Data (200 - 1250 A)

				200 A	250 A	315 A	400 A	630 A	800 A	1250 A
Rated Insulation Voltage			V	750	750	800	800	1000	1000	1000
Rated Impulse Withstand Voltage			kV	8	8	8	8	12	12	12
AC Rated Operational Current	AC 21 A	400 V	A	200	250	315	400	630	800	1250
		690 V	A	200 [1]	250 [1]	315 [1]	315	500	800	800
	AC 22 A	400 V	A	200	250	315	400	630	800	1250
		690 V	A	200 [1]	250 [1]	315 [1]	315	500	800	800
	AC 23 A	400 V	A	200	250	315	400	630	800	1000
		690 V	A	200 [1]	250 [1]	250 [1]	250	315	630	630
DC Rated Operational Current / Poles in Series	DC 21 A	220 V	A	200	250	250	315	315	800	1250
		440 V	A	250 [2]	250 [2]	250 [2]	315	315	800 [2]	1000 [2]
	DC 22 A	220 V	A	200	250	250	315	315	800	1250
		440 V	A	250 [2]	250 [2]	250 [2]	315	315	800 [2]	1000 [2]
	DC 21 A	220 V	A	200	200	200	200	400	800	1250
		440 V	A	200 [2]	200 [2]	200 [2]	250	315	800 [2]	1000 [2]
Operational Power	Without Pre-break AC	440 V	kW	100	132	160	220	355	63	560
	Without Pre-break AC	690 V	kW	150	220	222	220	295	90	400
Rated Capacitor Power	–	–	kVAr	90	115	145	185	290	365	460

Notes

1) With terminal shrouds/screen.

2) 4 pole device with 2 poles in series by polarity.

240 / 415 V ratings suitable for use on 230 / 400 V in accordance with AS 60038: 2012.

Ratings to AS/NZS 60947-3 and IEC 60947-3

Connection (20 - 160 A)

				20 A	32C A	32 A	63 A	100 A	125 A	160 A	160 A
Connection Cable Size (Min. / Max.)	–	–	mm^2	2.5 / 16	2.5 / 16	6 / 25	10 / 25	25 / 95	35 / 95	50 / 95	50 / 95

Physical (20 - 160 A)

				20 A	32C A	32 A	63 A	100 A	125 A	160 A	160 A
Mechanical Endurance	–	–	Ops	20000	20000	10000	10000	10000	10000	10000	10000
Weight (3 Pole)	–	–	Kg	0.5	0.5	1.0	1.3	1.8	1.9	2.5	2.5

Short-Circuit Capacity (20 - 160 A)

				20 A	32C A	32 A	63 A	100 A	125 A	160 A	160 A
Short Circuit Capacity Switch-Fuse Cut-Off Current (kA Peak)	–	400 V	kA	5.5	5.5	9	10.6	20	20	20	22.7
Fuse Protected Short Circuit Withstand AC DIN or BS (kA RMS Prospective)	–	400 V	kA	80	80	80	80	80	–	50	80
	–	Fuse	A	20	32	32	63	100	–	160	160

Notes

240 / 415 V ratings suitable for use on 230 / 400 V in accordance with AS 60038: 2012.

Ratings to AS/NZS 60947-3 and IEC 60947-3

Connection (200 - 1250 A)

				200 A	250 A	315 A	400 A	630 A	800 A	1250 A
Connection Cable Size (Min. / Max.)	–	–	mm^2	94 / 240	94 / 240	185 / 240	185 / 240	2 x 150 / 2 x 300	2 x 185 / 2 x 300	4 x 185

Physical (200 - 1250 A)

				200 A	250 A	315 A	400 A	630 A	800 A	1250 A
Mechanical Endurance	–	–	Ops	10000	10000	10000	10000	8000	8000	8000
Weight (3 Pole)	–	–	Kg	3.8	3.8	4.8	4.8	18.7	19.8	25.0

Short-Circuit Capacity (200 - 1250 A)

				200 A	250 A	315 A	400 A	630 A	800 A	1250 A
Short Circuit Capacity Switch-Fuse Cut-Off Current (kA Peak)	–	400 V	kA	32.5	32.5	40	40	70	80	90
Fuse Protected Short Circuit Withstand AC DIN or BS (kA RMS Prospective)	–	400 V	kA	80	80	80	80	80	80	–
	–	Fuse	A	200	250	315	400	630	800	–

Notes

240 / 415 V ratings suitable for use on 230 / 400 V in accordance with AS 60038: 2012.

Ratings to AS/NZS 60947-3 and IEC 60947-3

Socomec Switch Fuse Direct Mount Handles

Direct Mount Handles

Switch fuse bodies can be padlocked OFF



Item Description	Catalogue No.
Direct Mount Handle Suits SSF 20 A - 32 A	36294012
Direct Mount Handle Suits SSF 63 A - 400 A	36297910
Direct Mount Handle Suits SSF 630 A - 800 A	38996011
Direct Mount Handle Suits SSF 800 A - 1250 A	38997011

Socomec Switch Fuse Auxiliaries

Early Break Operation

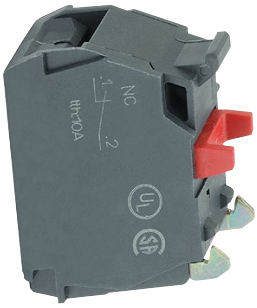

Item Description	Catalogue No.
Auxiliary 1 N/O suits Switch Fuse SSF 20 - 32 A	39990701
AUX 1 N/C suits Switch Fuse VLB32 - 40 and 125 - 500, SSF 63 - 400 A	39990702



Item Description	Catalogue No.
Auxiliary Side 1 N/O / 1 N/C 1st Pos. suits Switch Fuse SSF 63 - 800 A	39990041
Auxiliary Side 1 N/O / 1 N/C 2nd Pos. suits Switch Fuse SSF 800 - 1250 A	39990042

Socomec Switch Fuse Terminal Shrouds

- Top or bottom touch protection from direct contact with terminals or connection parts
- Perforations allow remote thermgraphic inspection without the need to remove the shrouds
- The shrouds provide phase protection barriers between phases
- The terminals shrouds consist of clip-together 1 pole covers, and can be converted to 3 or 4 pole types
- IP20 rating from front



Item Description	Catalogue No.
Terminal Shroud 3 Pole suits Switch Fuse 630 A and 800 A	38983080
Terminal Shroud 3 Pole suits Switch Fuse 1250 A	38983120
Terminal Shroud 4 Pole suits Switch Fuse 630 A and 800 A	38984080
Terminal Shroud 4 Pole suits Switch Fuse 1250 A	38984120
Terminal Shroud 3 Pole suits Switch Fuse VLB125 - 200 SSF100 - 160	39983016
Terminal Shroud 4 Pole suits Switch Fuse VLB125 - 200 SSF100 - 160	39984016
Terminal Shroud 3 Pole suits Switch Fuse VLB250 - 500 SSF200 - 400	39983025
Terminal Shroud 4 Pole suits Switch Fuse VLB250 - 500 SSF200 - 400	39984025

Socomec Switch Fuse Solid Neutral Modules

Solid links can be used, when a user wants a switch fuse to be an isloator, and when fuse links are not fitted. Performs the function of an add-on, unswitched neutral pole.



Item Description	Catalogue No.
Solid Neutral Module Suits Switch Fuse 32 A	36299227
Solid Neutral Module Suits Switch Fuse 63 A	36299232
Solid Neutral Module Suits Switch Fuse 100 A	36299236
Solid Neutral Module Suits Switch Fuse 160 A	36299250
Solid Neutral Module Suits Switch Fuse 200 A and 250 A	36299260
Solid Neutral Module Suits Switch Fuse 315 A and 400 A	36299266
Solid Neutral Module Suits Switch Fuse 630 A and 800 A	36299294

DIN Solid Links

Din Fuse Solid Link

A solid link can be installed in a switch fuse, when a fuse is not required.



Item Description	Catalogue No.
Fuse DIN Solid Links 160 A Size 00C	64200000
Solid Link Fuse DIN 160 A Size 00	64210000
Fuse DIN Solid Links 250 A Size 1	64210001
Fuse DIN Solid Links 400 A Size 2	64210002
Fuse DIN Solid Links 630 A Size 3	64210003
Fuse DIN Solid Links 1250 A Size 4	64410005

BS Fuse Holders for Clip-In Offset Tag Fuse Links



- ✔ Pull to disconnect circuit and remove fuse
- ✔ Suits offset tag links 2 to 63 A
- ✔ Type gG general purpose rated
- ✔ 550 V AC rated
- ✔ Complies to BS standard
- ✔ DIN rail mount

General

Un, Nominal Operational Voltage, AC	550	V AC
Ue, Rated Operational Voltage, AC	550	V AC
Uimp, Impulse Withstand Voltage	8	kV
Rated Peak Withstand Current 550 V	80	kA
Maximum Operating Temperature With Derating	70	°C max
IP Rating	IP2X	
Standards Compliance	BS 88 AS 60269.1	
Certifications	ASTA	
Service Information	Product is not repairable. Please contact your local NHP sales representative for assistance.	

Dimensions for BS Fuse Link Holders (NV Clip-In) (mm)

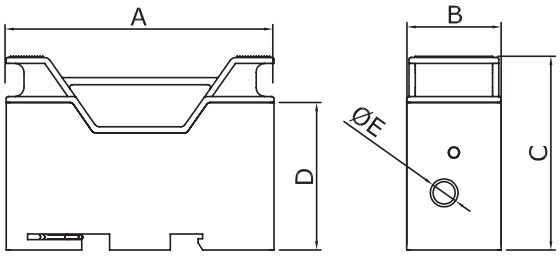

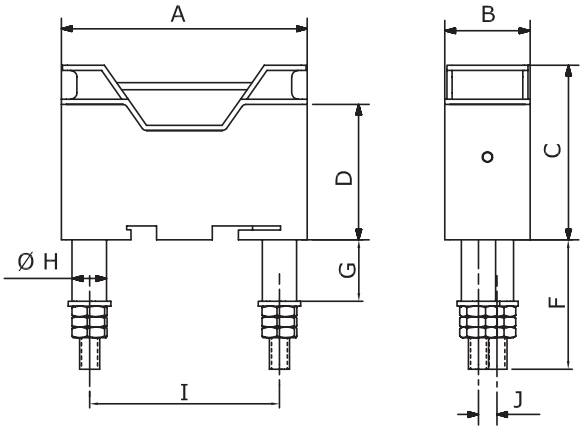

Fuse Holder Type	A	B	C	D	E	F	G	H	I	J	K
NV32FW	75.5	26.5	54	41.5	7.8	-	-	-	-	-	-
NV32FWW	75.5	26.5	54	41.5	-	40	17	9.7	58	5.6	-
NV32BBS	75.5	26.5	54	41.5	7.8	40	17	9.7	-	-	2.7
NV63FW	89	28.5	64	48.6	9	-	-	-	-	-	-
NV63BBS	89	28.5	64	48.6	9	39	18.3	12	-	-	3.3

NV Clip in Fuse Holder for Clip-In Fuse Links

Connection Mode	Fuse Rating (A)	Housing (Colour)	H x W x D (mm)	Wire Conductor Size (mm)	Ue Max (V AC)	Catalogue No.
Rear Stud, Rear Stud	32	Black	75.5 x 27 x 56	1 mm^2 - 16 mm^2	550	NV32BBS
Front Wired, Front Wired	32	Black	75.5 x 27 x 56	1 mm^2 - 16 mm^2	550	NV32FW
Front Wired, Front Wired	32	White	75.5 x 27 x 56	1 mm^2 - 16 mm^2	550	NV32FWW
Front Wired, Front Wired	63	Black	88.5 x 30 x 63	1 mm^2 - 25 mm^2	550	NV63BBS
Front Wired, Front Wired	63	Black	88.5 x 30 x 63	1 mm^2 - 25 mm^2	550	NV63FW

General Data

	NV32	NV63	
Rated Current	32	63	A
Un, Nominal Operational Voltage, AC	550	550	V AC
Ue, Rated Operational Voltage, AC	550	550	V AC
Ue, Rated Operational Voltage, DC, Max	250	-	V DC
Uimp, Impulse Withstand Voltage	8	8	kV
Rated Peak Withstand Current 550 V	80	80	-
Maximum Operating Temperature With Derating	70	70	°C max
IP Rating	IP2X	IP2X	-
Standards Compliance	BS 88	BS 88	-
Certifications	ASTA	ASTA	-
Fitted Fuse Link Size / Type	F1	F2	-
Service Information	Product is not repairable. Please contact your local NHP sales representative for assistance.	Product is not repairable. Please contact your local NHP sales representative for assistance.	-

Connection

	NV32	NV63	
Connection Mode	Front Wired, Front Wired / Rear Stud, Rear Stud	Front Wired, Front Wired / Rear Stud, Rear Stud	-
Mounting	DIN-35 Rail Mount	DIN-35 Rail Mount	-
Mounting Screw Option	M5	M5	-
Maximum Terminal Torque	3.5	4	Nm
Wire / Conductor Size (Max)	16	25	mm² (Max)
Wire / Conductor Size (Min)	1	1	mm² (Min)

BS Fuse Holders for Bolt-In Offset Tag Fuse Links



- ✔ Pull to disconnect circuit and remove fuse
- ✔ Suits bolt-in fuse links 32 to 125 A
- ✔ gG general purpose rated
- ✔ 550 V AC and 690 V AC ratings
- ✔ Complies to BS standard
- ✔ DIN rail mountable

General

Un, Nominal Operational Voltage, AC	550 / 690	V AC
Ue, Rated Operational Voltage, AC	550 / 690	V AC
Uimp, Impulse Withstand Voltage	8	kV
Rated Peak Withstand Current at Rated Voltage	80	kA
Maximum Operating Temperature With Derating	70	°C max
IP Rating	IP2X	
Standards Compliance	BS 88 AS 60269.1	
Certifications	ASTA	
Service Information	Product is not repairable. Please contact your local NHP sales representative for assistance.	

Dimensions for BS Fuse Link Holders (NC Bolt-In) (mm)

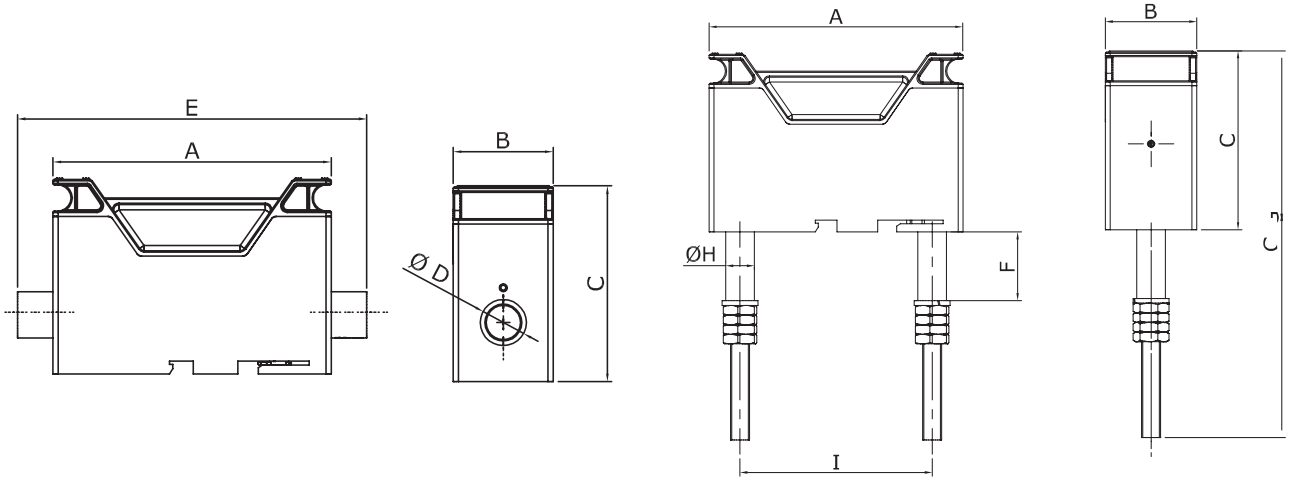

Fuse Holder Type	A	B	C	D	E	F	G	H	I
NC32FW	77.2	97.2	56	9	97.2	-	-	-	-
NC32FWW	77.2	97.2	56	-	-	28.6	122	11.9	58
NC63FW	105.8	38	74.5	17.5	132.8	-	-	-	-
NC125FW	134	48.9	97.8	17.5	165.7	-	-	-	-
NC125BBSFW	134	48.9	97.8	-	-	28.6	184.4	11.9	-

NC Clip in Fuse Holder for Bolts in Fuse Links

Connection Mode	Fuse Rating (A)	H x W x D (mm)	Wire Conductor Size (mm)	Ue Max (VAC)	Fitted Fuse Link Size	Catalogue No.
Front Wired, Front Wired	32	97 x 27 x 57	1 mm^2 - 16 mm^2	550	A1	NC32FW
Front Wired, Front Wired	63	106 x 38 x 75	1 mm^2 - 25 mm^2	690	A2 - A3	NC63FW
Front Wired, Front Wired	125	166 x 49 x 98	6 mm^2 - 50 mm^2	690	A4	NC125FW
Back Bolt Stud	125	134 x 49 x 98	(M8 thread)	690	A4	NC125BBS

General Data

	NC32	NC63	NC125	
Rated Current	32	63	125	A
Un, Nominal Operational Voltage, AC	550	690	690	V AC
Ue, Rated Operational Voltage, AC	550	690	690	V AC
Ue, Rated Operational Voltage, DC, Max	-	-	-	V DC
Uimp, Impulse Withstand Voltage	8	8	8	kV
Rated Peak Withstand Current 550 V at Rated Voltage	80	80	80	
Maximum Operating Temperature With Derating	70	70	70	°C max
IP Rating	IP2X	IP2X	IP2X	-
Standards Compliance	BS 88, AS 60269.1	BS 88, AS 60269.1	BS 88, AS 60269.1	-
Certifications	ASTA	ASTA	ASTA	-
Fitted Fuse Link Size / Type	A1	A2 - A3	A4	-
Service Information	Product is not repairable. Please contact your local NHP sales representative for assistance.	Product is not repairable. Please contact your local NHP sales representative for assistance.	Product is not repairable. Please contact your local NHP sales representative for assistance.	-

Connection

	NC32	NC63	NC125	
Connection Mode	Front Wired	Front Wired	Front Wired / Rear Stud, Rear Stud	-
Mounting	DIN-35 Rail Mount / Panel Mount	DIN-35 Rail Mount / Panel Mount	DIN-35 Rail Mount / Panel Mount	-
Mounting Screw Option	M5	M5	M5	-
Maximum Terminal Torque	3.5	3.5	4	Nm
Wire / Conductor Size (Max)	16	50	70	mm² (Max)
Wire / Conductor Size (Min)	1	1	1	mm² (Min)
Rear Stud (Type) Size	-	-	M8	-

BS Fuse Links Clip-In Offset Tag



- ✔ Complies to BS standard
- ✔ 80 kA fault interruption capacity
- ✔ Type gG for general, cable, line and motor protection
- ✔ 2 to 63 A range
- ✔ 415 V AC rated

General

Un, Nominal Operational Voltage, AC	415 / 500	V AC
Ue, Rated Operational Voltage, AC	415 / 500	V AC
Uimp, Impulse Withstand Voltage	6	kV
Maximum Operating Temperature With Derating	70	°C max
Standards Compliance	IEC 60269-1 IEC 60269-2 VDE 0636-10 DIN 43620 AS 60269-1:2005 BS 88	
Certifications	ASTA	

Dimensions for BS Fuse Links (NNS, NES) (mm)

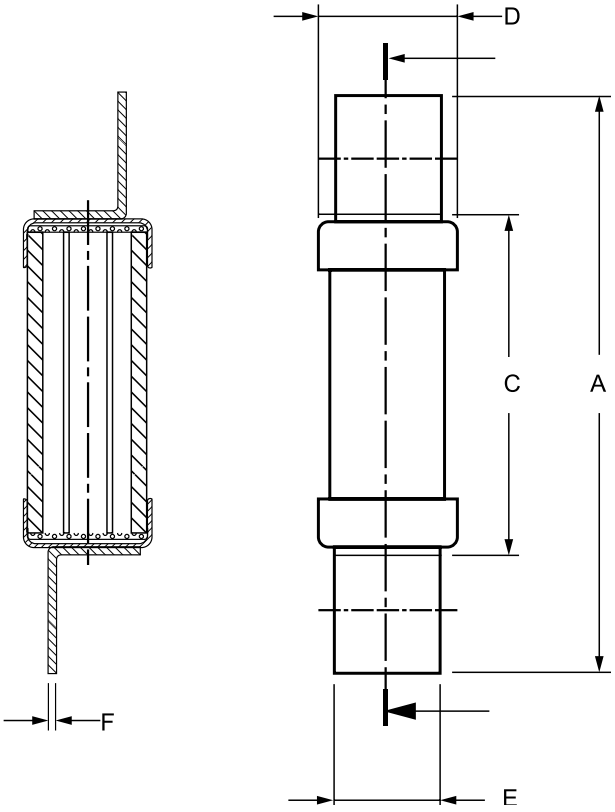

Series	Category	Brand	A Overall Length	B Fitting Centres	C Body Length	D Body Diameter	E Tag Width	F Tag Thickness	G Hole Length	H Hole Width
NNS2-32	F1	FuseMaster	60.0	-	35.0	14.2	11.0	0.8	-	-
NNS20M	F1	FuseMaster	62.0	-	35.0	14.3	11.5	0.8	-	-
NNS32M	F1	FuseMaster	62.0	-	39.0	17.5	11.5	0.8	-	-
NES20-63	F2	FuseMaster	69.0	-	39.0	17.5	15.0	1.4	-	-

BS Fuse Links Clip-In Offset

Amp Rating (A)	Voltage Rating (V AC)	Utilisation Category	Breaking Capacity at Rated Voltage (kA)	Catalogue No.
2	415	gG	80	NNS2
4	415	gG	80	NNS4
6	415	gG	80	NNS6
8	415	gG	80	NNS8
10	415	gG	80	NNS10
16	415	gG	80	NNS16
20	415	gG	80	NNS20
25	415	gG	80	NNS25
32	415	gG	80	NNS32
10M16	415	gM	80	NNS10M16
16M20	415	gM	80	NNS16M20
20M25	415	gM	80	NNS20M25
25M32	415	gM	80	NNS25M32
32M40	415	gM	80	NNS32M40
32M50	415	gM	80	NNS32M50
32M63	415	gM	80	NNS32M63
20	415	gG	80	NES20
25	415	gG	80	NES25
32	415	gG	80	NES32
40	415	gG	80	NES40
50	415	gG	80	NES50
63	415	gG	80	NES63

Time Current Curve 2 to 63 A

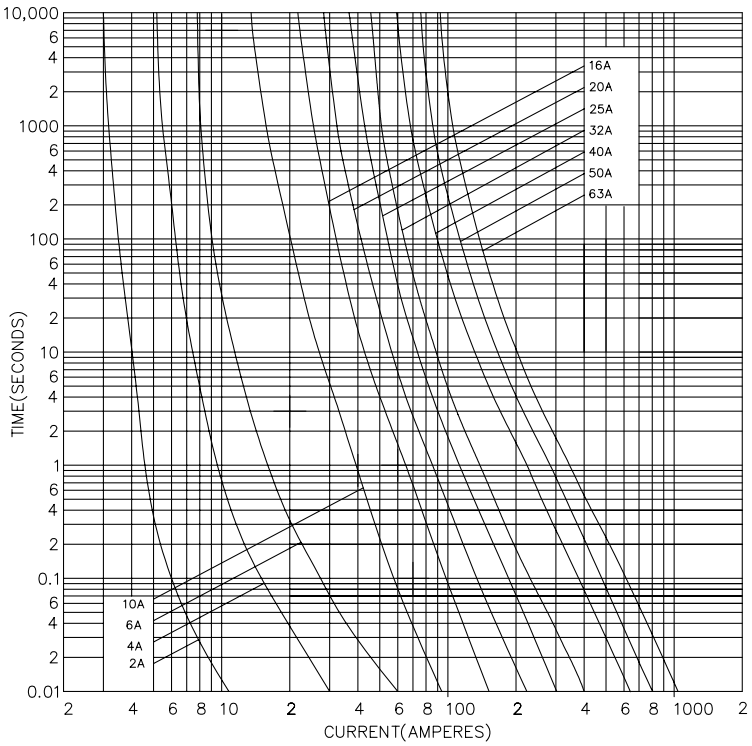

Time Current Curves “M” Motor Start Fuses 2 to 63 A

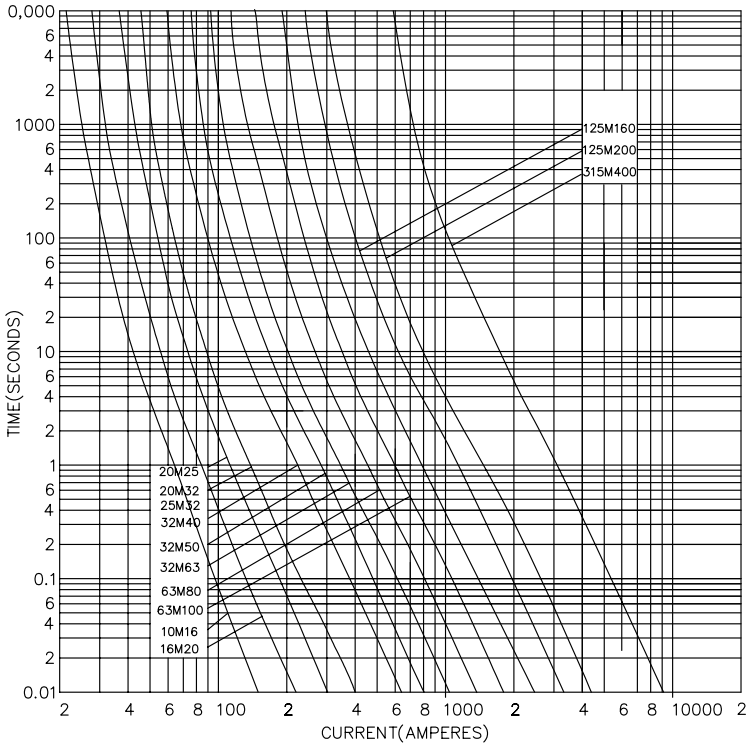

Cut-Off Characteristics Offset Tag Fuses 2 A to 63 A

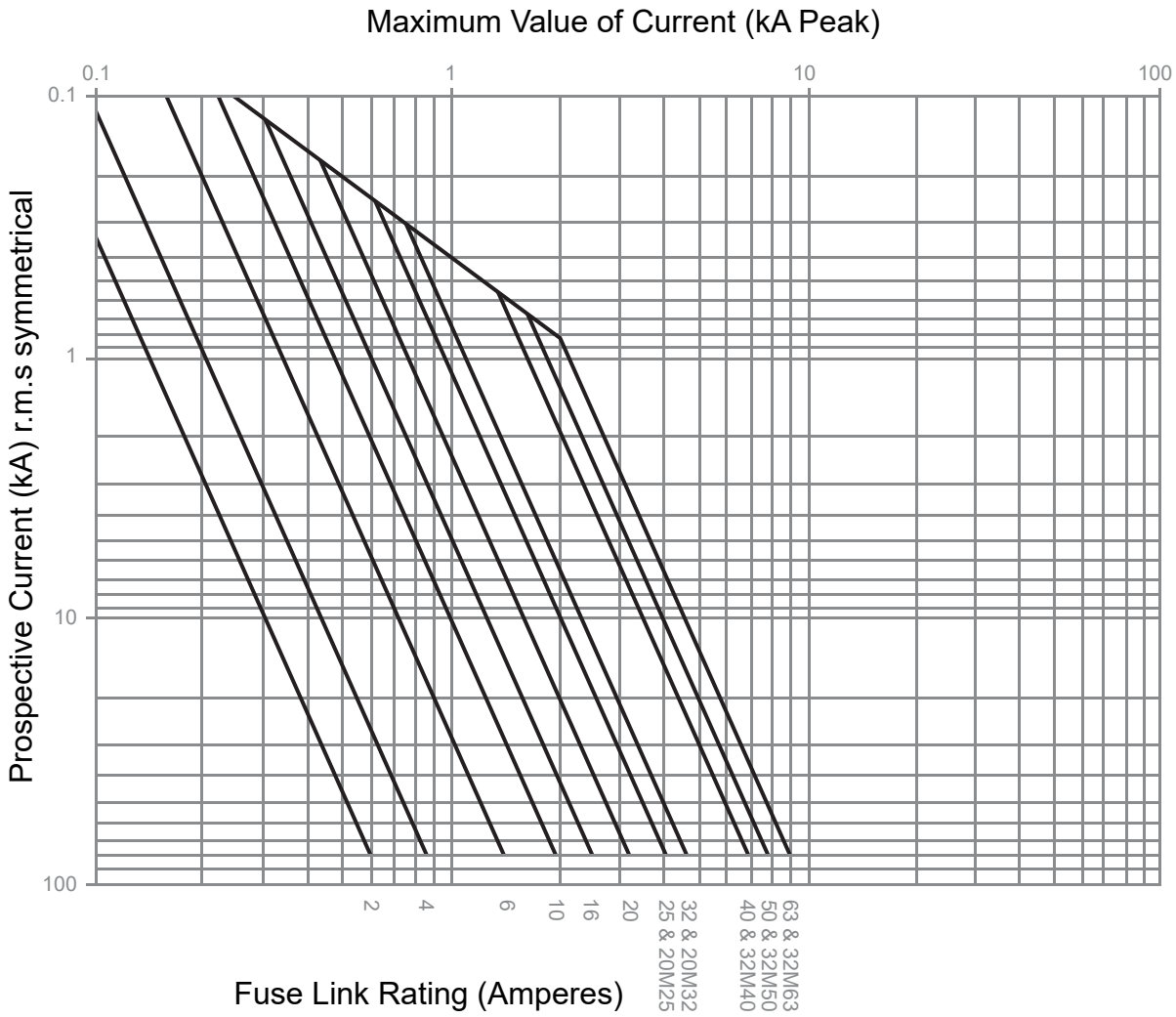

Energy Let Through 20 to 630 A

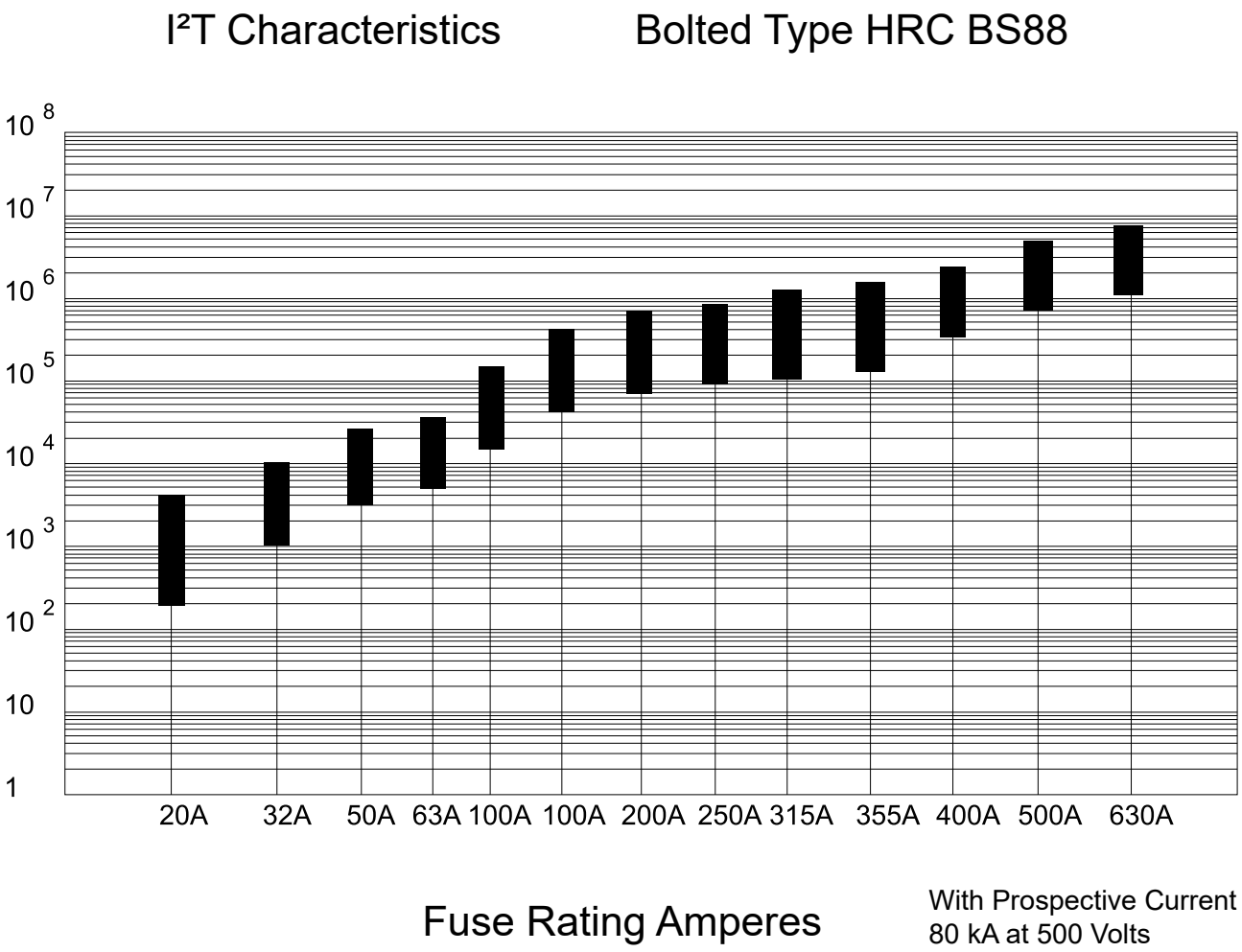

BS Fuse Links Bolt-In Offset Tag



- ✔ Complies to BS Standard
- ✔ 80 kA fault interruption capacity
- ✔ Type gG and gM general, cable and motor protection
- ✔ 2 to 200 A range
- ✔ 415 / 500 V AC rated

General

Un, Nominal Operational Voltage, AC	415 / 500	V AC
Ue, Rated Operational Voltage, AC	415 / 500	V AC
Uimp, Impulse Withstand Voltage	6	kV
Maximum Operating Temperature With Derating	70	°C max
Standards Compliance	IEC 60269-1 IEC 60269-2 VDE 0636-10 DIN 43620 AS 60269-1:2005 BS 88	
Certifications	ASTA	

Dimensions for BS Fuse Links (NNIT) (mm)

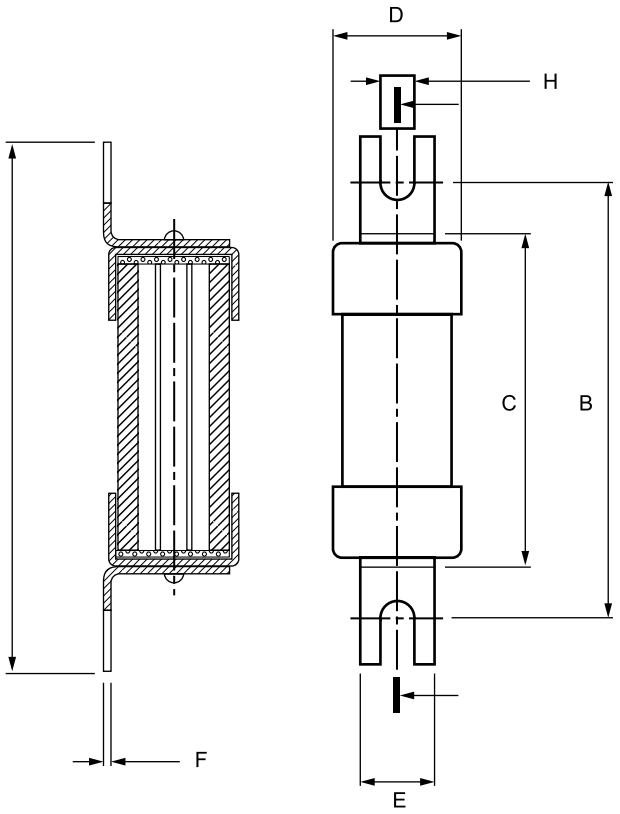

Series	Category	Brand	A Overall Length	B Fitting Centres	C Body Length	D Body Diameter	E Tag Width	F Tag Thickness	G Hole Length	H Hole Width
NNIT 2 – 32	A1	FuseMaster	55.0	44.5	35.0	14.2	10.5	0.8	-	4.8
NNIT 20M	A1	Lawson	56.0	44.5	33.0	12.7	9.5	0.8	-	4.8
NNIT 32M	A1	Lawson	56.0	44.5	33.0	12.7	9.5	0.8	-	4.8

Dimensions for BS Fuse Links (NTIA, NTIS, NOS) (mm)

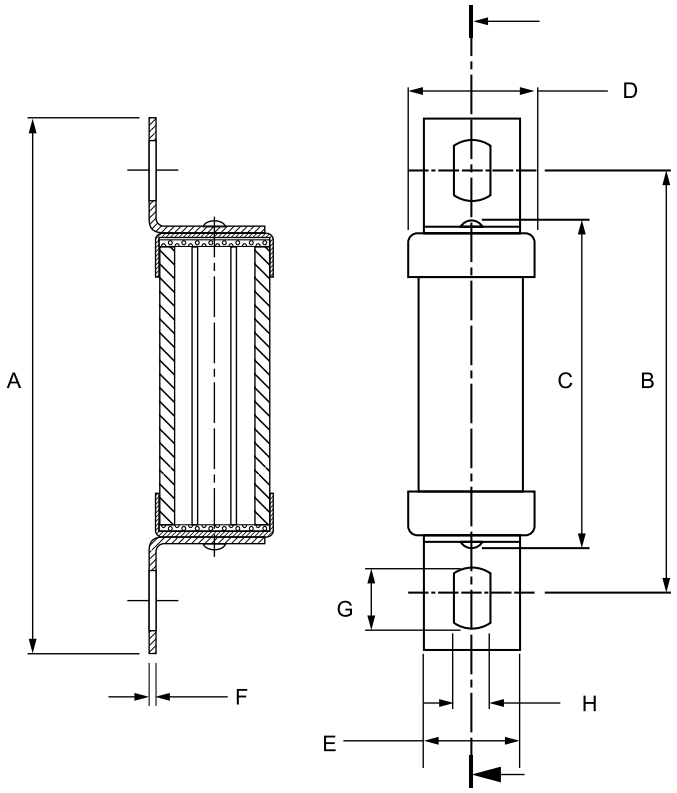

Series	Category	Brand	A Overall Length	B Fitting Centres	C Body Length	D Body Diameter	E Tag Width	F Tag Thickness	G Hole Length	H Hole Width
NTIA 2 – 32	A2	Mersen	84.5	73	55	13.5	8.7	1.2	8	5.5
NTIA 32M	A2	Mersen	86	73	49	21.9	9	1.2	8	5.5
NTIS 36 – 63	A3	Mersen	88.5	73	56	17.5	-	1.2	-	5.5
NTIS 80 – 100	A3	Mersen	89	73	49	26.9	13	1.2	-	5.5
NTIS 63M	A3	Mersen	89	73	49	26	13	1.2	-	5.5
NTIS 100M	A3	Mersen	89	73	49	26	13	1.2	-	5.5
NOS 80 - 100	as A3	FuseMaster	89	73	49	26	13	1.2	-	5.5
NOS 100M	as A3	Lawson	89	73	49	TBC	13	1.2	-	5.5

Dimensions for BS Fuse Links (NTCP, NTFP) (mm)

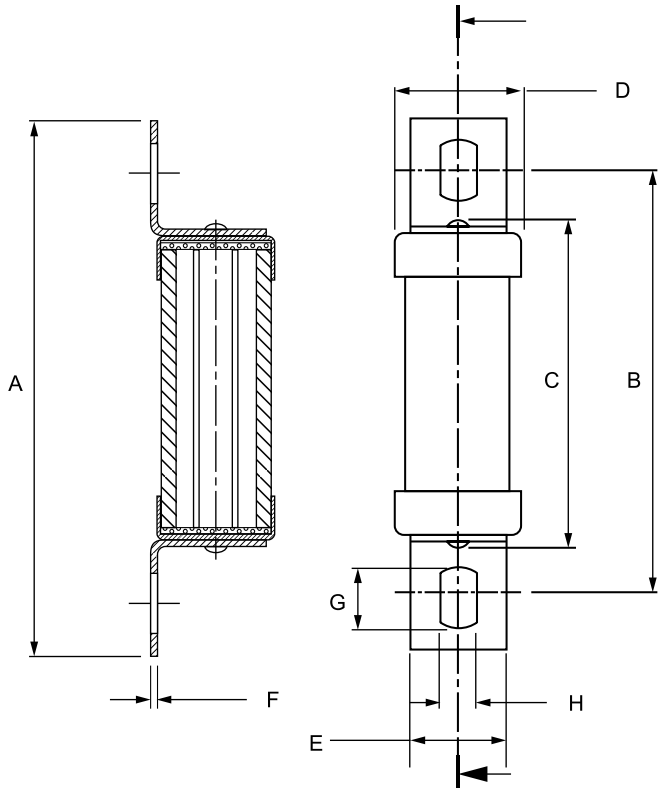

Series	Category	Brand	A Overall Length	B Fitting Centres	C Body Length	D Body Diameter	E Tag Width	F Tag Thickness	G Hole Length	H Hole Width
NTCP 20 – 40	A4	FuseMaster	110	94	51	22	20	2.4	11	8.7
NTCP 50 – 100	A4	FuseMaster	110	94	64.5	31.8	17	2.4	10	8.7
NTCP 125 – 160	A4	Mersen	110	94	64.5	26.9	17	2.4	10	8.7
NTCP 100M	A4	Lawson	110	94	51	35	20	2.4	11	8.7
NTFP 125 – 200	as A4	FuseMaster	110	94	73.5	39.5	19	2.4	11	8.7
NTFP 200M	as A4	Lawson	110	94	51	41	20	2.4	11	8.7

Bolt-In Offset Tag Fuses

Fuse Rating (A)	Cartridge Size	Ue Max (V AC)	Fuse Characteristics Type	Breaking Capacity @ Rated Voltage (kA)	Catalogue No.
2	A1	500	gG	80	NNIT2
4	A1	500	gG	80	NNIT4
6	A1	500	gG	80	NNIT6
10	A1	500	gG	80	NNIT10
16	A1	500	gG	80	NNIT16
20	A1	500	gG	80	NNIT20
25	A1	500	gG	80	NNIT25
32	A1	500	gG	80	NNIT32
20M25	A1	415	gM	80	NNIT20M25
20M32	A1	415	gM	80	NNIT20M32
32M40	A1	415	gM	80	NNIT32M40
32M50	A1	415	gM	80	NNIT32M50
32M63	A1	415	gM	80	NNIT32M63
2	A2	500	gG	80	NTIA2
4	A2	500	gG	80	NTIA4
6	A2	500	gG	80	NTIA6
10	A2	500	gG	80	NTIA10
16	A2	500	gG	80	NTIA16
20	A2	500	gG	80	NTIA20
25	A2	500	gG	80	NTIA25
32	A2	500	gG	80	NTIA32
32M40	A2	415	gM	80	NTIA32M40
32M50	A2	415	gM	80	NTIA32M50
32M63	A2	415	gM	80	NTIA32M63
36	A3	500	gG	80	NTIS36
40	A3	500	gG	80	NTIS40
50	A3	500	gG	80	NTIS50

Fuse Rating (A)	Cartridge Size	Ue Max (V AC)	Fuse Characteristics Type	Breaking Capacity @ Rated Voltage (kA)	Catalogue No.
63	A3	500	gG	80	NTIS63
80	A3	500	gG	80	NTIS80
63M80	A3	415	gM	80	NTIS63M80
63M100	A3	415	gM	80	NTIS63M100
80	A3	500	gG	80	NOS83
100	A3	500	gG	80	NOS100
100M125	A3	415	gM	80	NOS100M125
100M160	A3	415	gM	80	NOS100M160
80	A4	500	gG	80	NTCP80
100	A4	500	gG	80	NTCP100
100M125	A4	415	gM	80	NTCP100M125
100M160	A4	415	gM	80	NTCP100M160
125	A4	500	gG	80	NTFP125
160	A4	500	gG	80	NTFP160
200	A4	500	gG	80	NTFP200
200M250	A4	415	gM	80	NTFP200M250

Time Current Curve 2 to 63 A

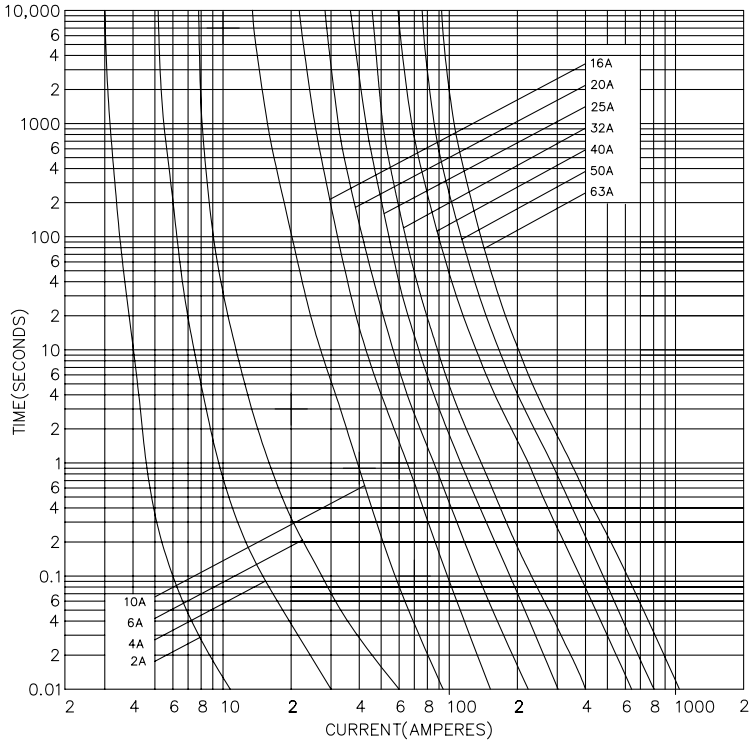

Time Current Curves “M” Motor Start Fuses 2 to 63 A

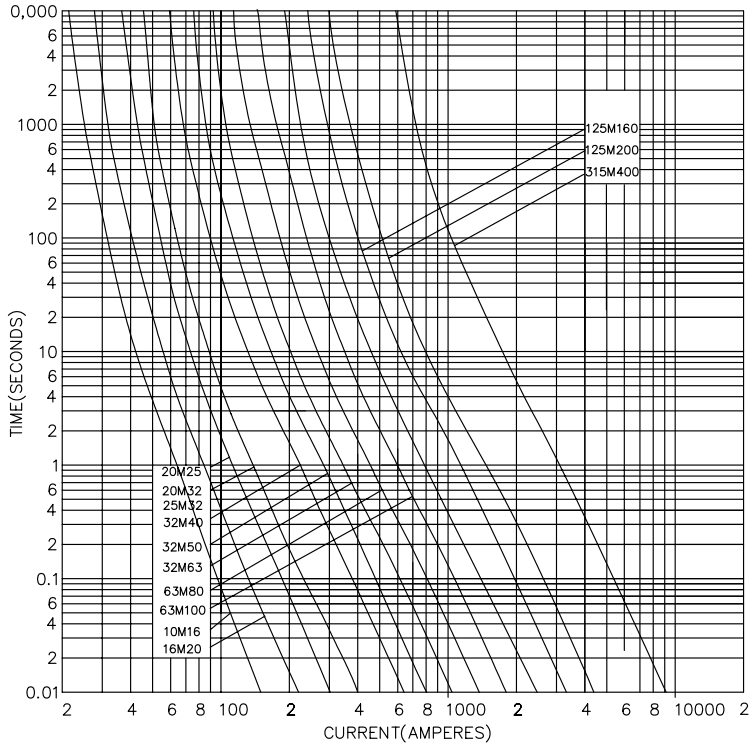

Time Current Curve Bolted Tag 32 to 800 A

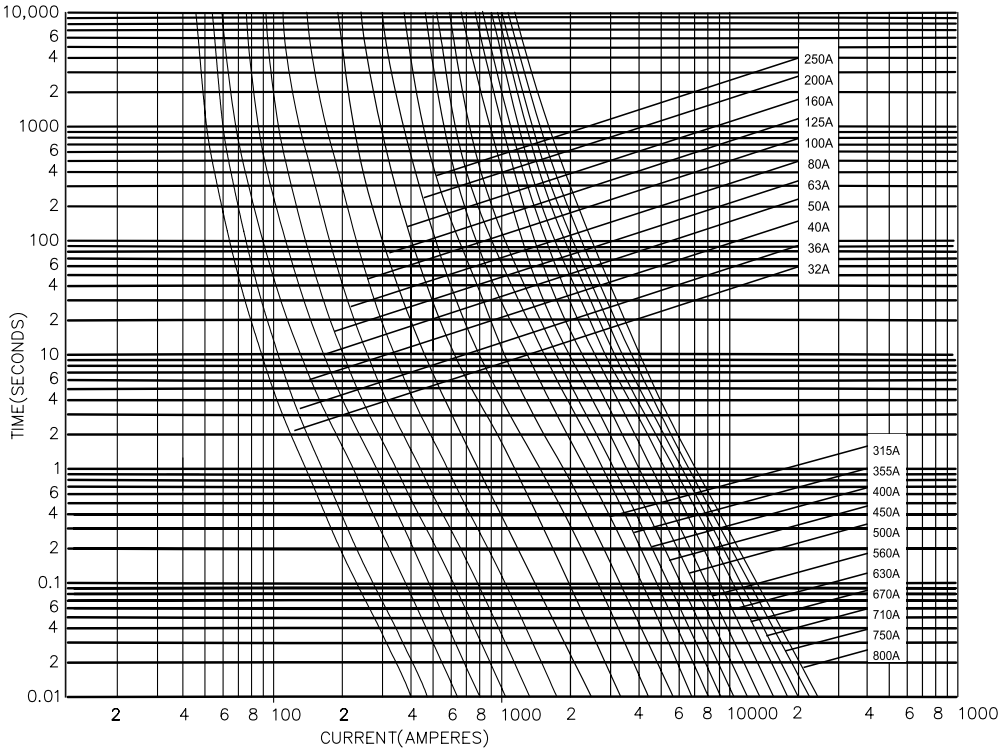

Time Current Curves “M” Motor Fuses 63 to 315 A

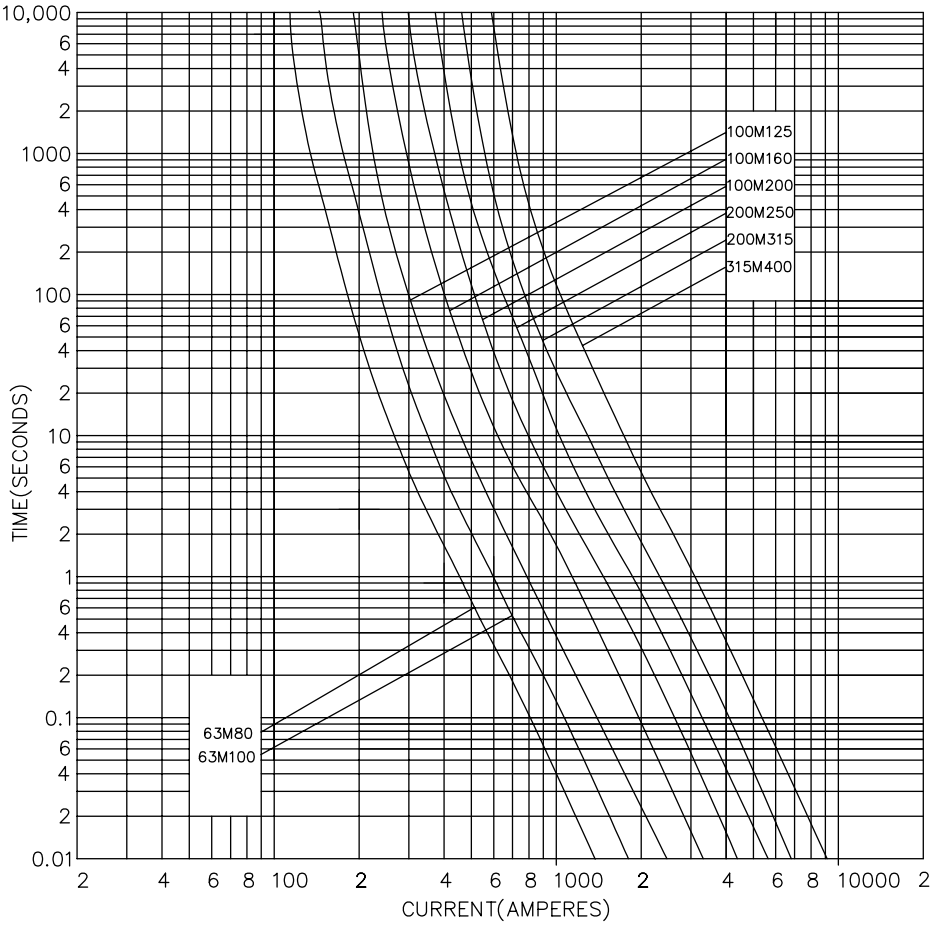

Cut-Off Characteristics 415 V AC 20 to 800 A

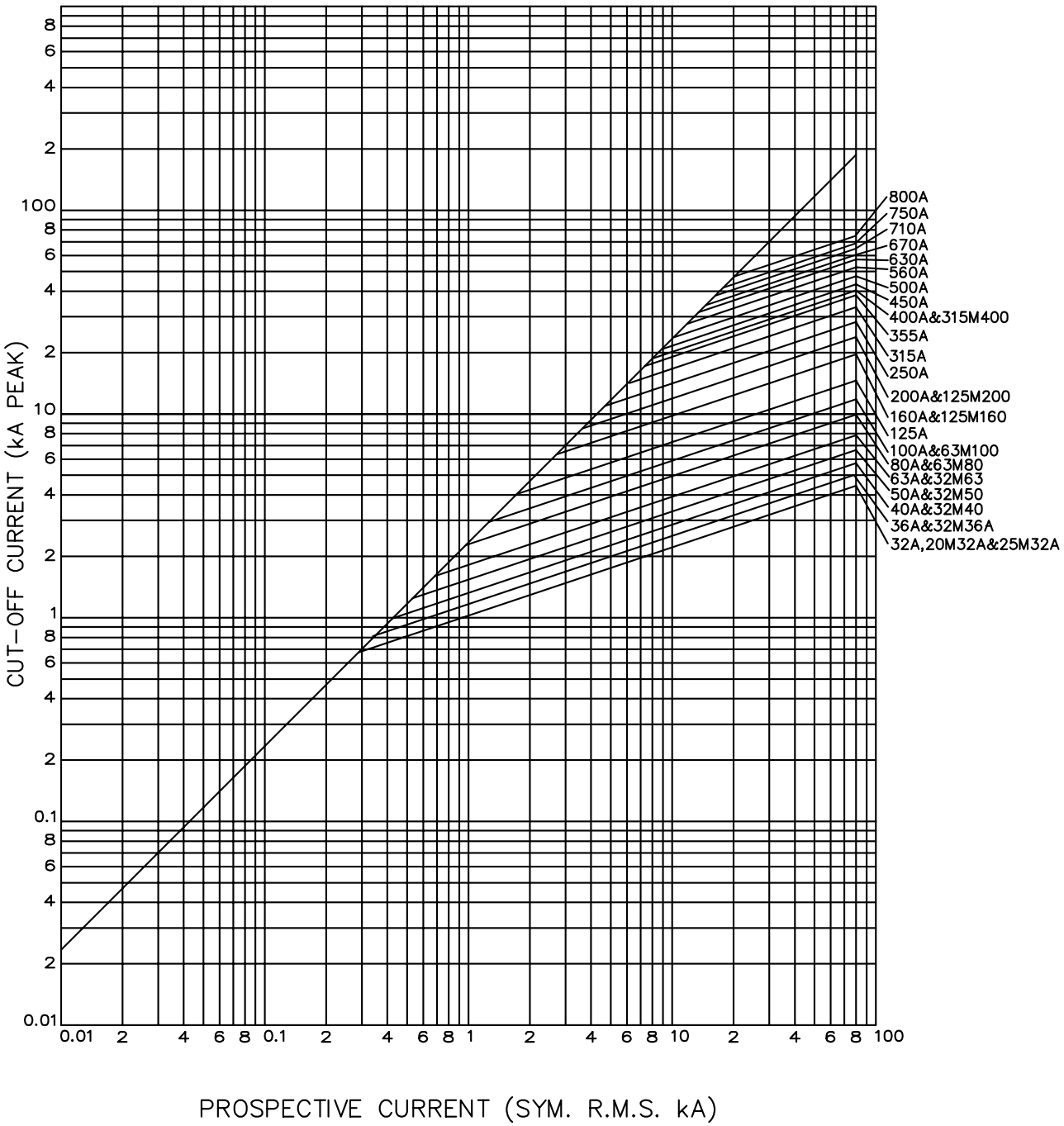

Energy Let Through 20 to 630 A

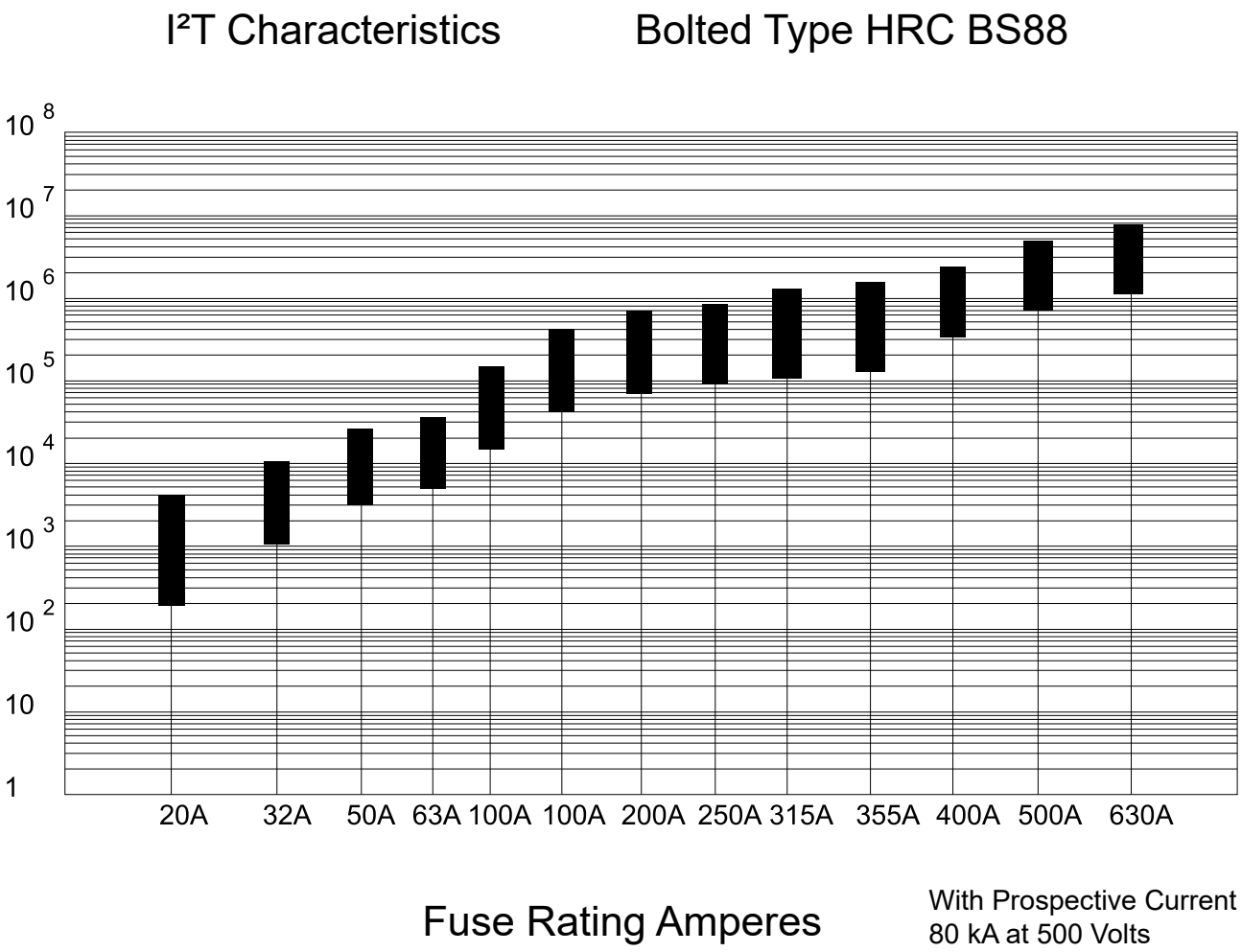

BS Fuse Links - Bolt-In Centre Tag



- ✔ Complies to BS standard
- ✔ 80 kA fault interruption capacity
- ✔ Type gG for general, cable, line and motor protection
- ✔ 2 to 1250 A range
- ✔ 415 V AC, 500 V AC and 550 V AC ratings.

General

Un, Nominal Operational Voltage, AC	415 / 500 / 550	V AC
Ue, Rated Operational Voltage, AC	415 / 500 / 550	V AC
Uimp, Impulse Withstand Voltage	8	kV
Maximum Operating Temperature With Derating	70	°C max
Standards Compliance	IEC 60269-1 IEC 60269-2 VDE 0636-10 DIN 43620 AS 60269-1:2005 BS 88	
Certifications	ASTA	

Dimensions for BS Fuse Links (NTBC, NTC, NTF, NTKF, NTKM, NTKM and NTMF) (mm)

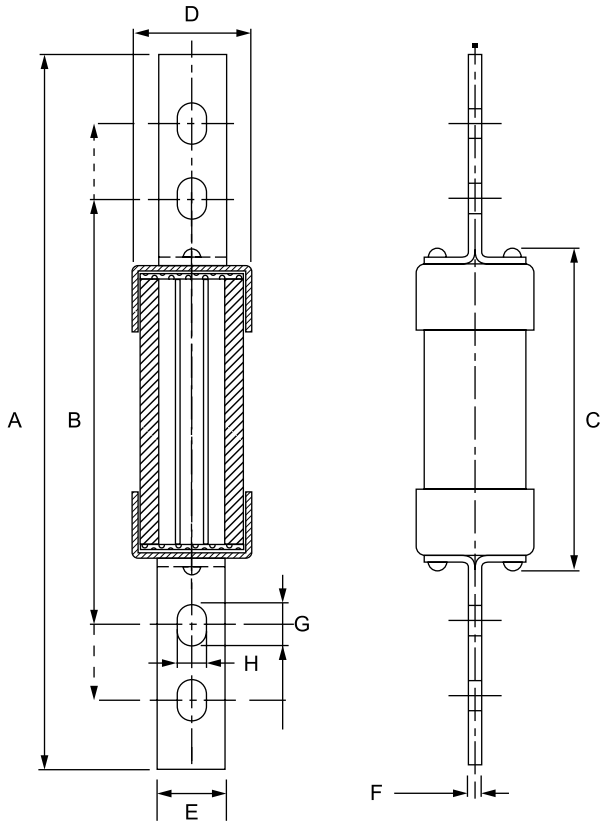

Series	Category	Brand	A Overall Length	B Fitting Centres	C Body Length	D Body Diameter	E Tag Width	F Tag Thickness	G Hole Length	H Hole Width
NTBC 2 – 40	B1	FuseMaster	137	111	45	22	15	1.4	14	8.7
NTBC 50 – 63	B1	FuseMaster	135	111	65	31.8	17	3.2	11	8.7
NTBC 63M	B1	Lawson	137	111	45	26	20	3.2	14	8.7
NTC 80 – 100	B1	FuseMaster	135.5	111	65	31.8	17	3.2	11	8.7
NTC 100M	B1	Lawson	137	111	45	35	20	3.2	14	8.7
NTF 125 – 200	B2	FuseMaster	131.5	111	72	39.5	19	3.2	11	8.7
NTF 200M	B2	Lawson	137	111	45	41	20	3.2	14	8.7
NTKF250S	B3	EATON	135.5	111	70	40	25.4	3.2	11	8.7
NTKF 250 - 315	B3	FuseMaster	135.5	111	70	50.5	25.4	3.2	11	8.7
NTKF 315M	B3	Lawson	137	111	45	51	26	6.4	14	8.7
NTKM 250 – 355	B4	FuseMaster	136.5	111	72	41	25.4	5.3	11	8.7
NTMF 355 - 400	B4	FuseMaster	137	111	52	50.5	26	6.4	16	8.7

Dimensions for BS Fuse Links (NTM, NTTM, NTLM, NTT, NTLT) (mm)

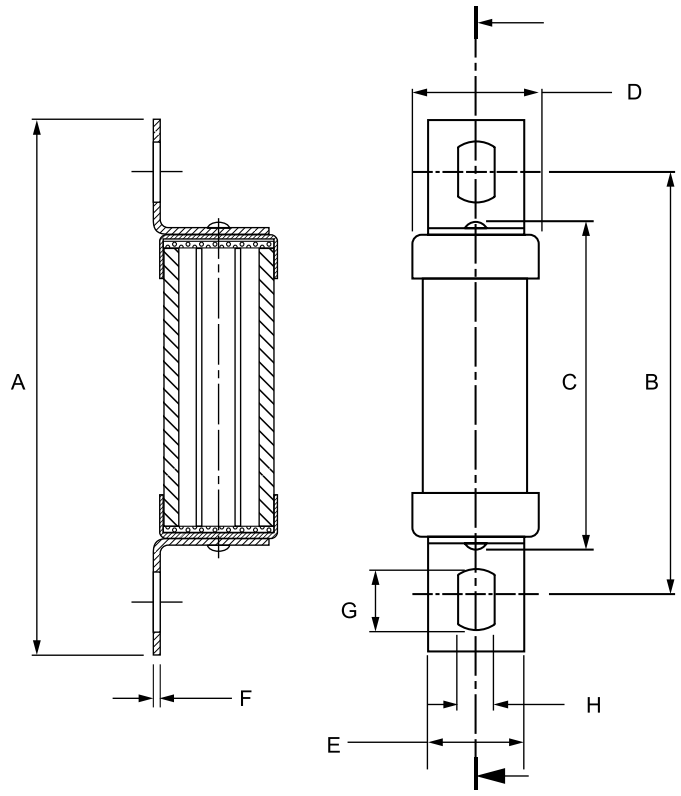

Series	Category	Brand	A Overall Length	B Fitting Centres	C Body Length	D Body Diameter	E Tag Width	F Tag Thickness	G Hole Length	H Hole Width
NTM355-400	C1	FuseMaster	210	133/184	77	50.5	25.4	6.5	12.5	10.3
NTM400M	C1	Lawson	210	133/184	51	61	26	6.4	16	10.3
NTTM	C2	FuseMaster	207	133/184	71	70	25.4	6.5	12.5	10.3
NTLM	C3	Lawson	210	133/184	56	73	26	9.5	16	10.3
NTT	-	Lawson	267	165/229	54	61	26	7.8	16	10.3
NTLT670-800	-	Lawson	267	165/229	56	73	26	9.5	16	10.3

Dimensions for BS Fuse Links (NTLU, NTXU) (mm)

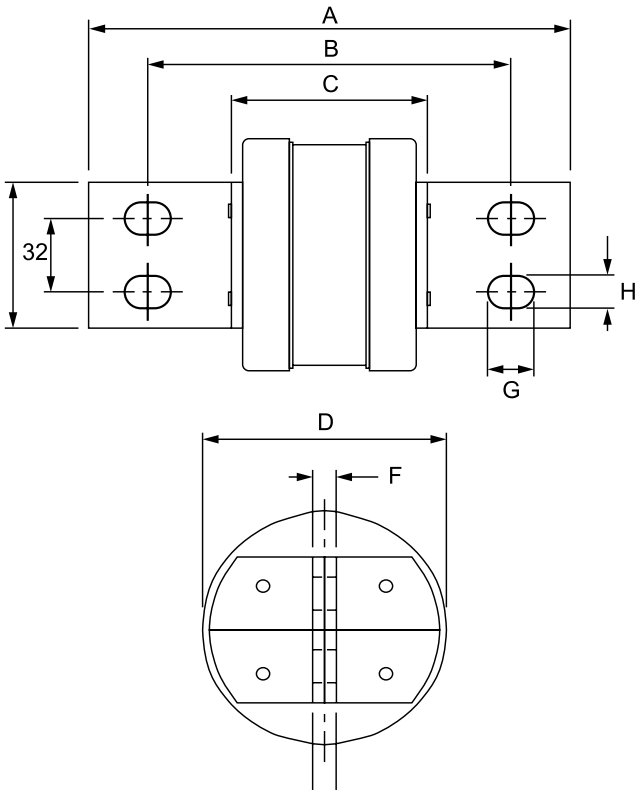

Series	Category	Brand	A Overall Length	B Fitting Centres	C Body Length	D Body Diameter	E Tag Width	F Tag Thickness	G Hole Length	H Hole Width
NTLU	D1	FuseMaster	197	149	56	73	63	9.5	16	10.3
NTXU	D1	Socomec	197	149	95	101.6	63	9.5	16.7	13.5

BS Fuse Links - Bolt-In Center Tag

Fuse Rating (A)	Fuse Sizes	Voltage Rating (V)	Breaking Capacity @ Rated Voltage (kA)	Catalogue No.
2	B1	415	80	NTBC2
4	B1	415	80	NTBC4
6	B1	415	80	NTBC6
10	B1	415	80	NTBC10
16	B1	415	80	NTBC16
20	B1	415	80	NTBC20
25	B1	415	80	NTBC25
32	B1	415	80	NTBC32
40	B1	415	80	NTBC40
50	B1	415	80	NTBC50
63	B1	415	80	NTBC63
63 M 80	B1	415	80	NTBC63M80
63 M 100	B1	415	80	NTBC63M100
80	B1	415	80	NTC80
100	B1	415	80	NTC100
100 M 125	B1	415	80	NTC100M125
100 M 160	B1	415	80	NTC100M160
125	B2	415	80	NTF125
160	B2	415	80	NTF160
200	B2	415	80	NTF200
200 M 250	B2	415	80	NTF200M250
200 M 315	B2	415	80	NTF200M315
250	B3	415	80	NTKF250
315	B3	415	80	NTKF315
315 M 400	B3	415	80	NTKF315M400
250	B4	415	80	NTKM250
315	B4	415	80	NTKM315
355	B4	415	80	NTMF355

Fuse Rating (A)	Fuse Sizes	Voltage Rating (V)	Breaking Capacity @ Rated Voltage (kA)	Catalogue No.
400	B4	415	80	NTMF400
355	C1	415	80	NTM355
400	C1	415	80	NTM400
450	C2	415	80	NTTM450
500	C2	415	80	NTTM500
560	C2	415	80	NTTM560
630	C2	415	80	NTTM630
710	C3	415	80	NTLM710
800	C3	415	80	NTLM800
1000	D1	415	80	NTXU1000
1250	D1	415	80	NTXU1250

Time Current Curve 2 to 63 A

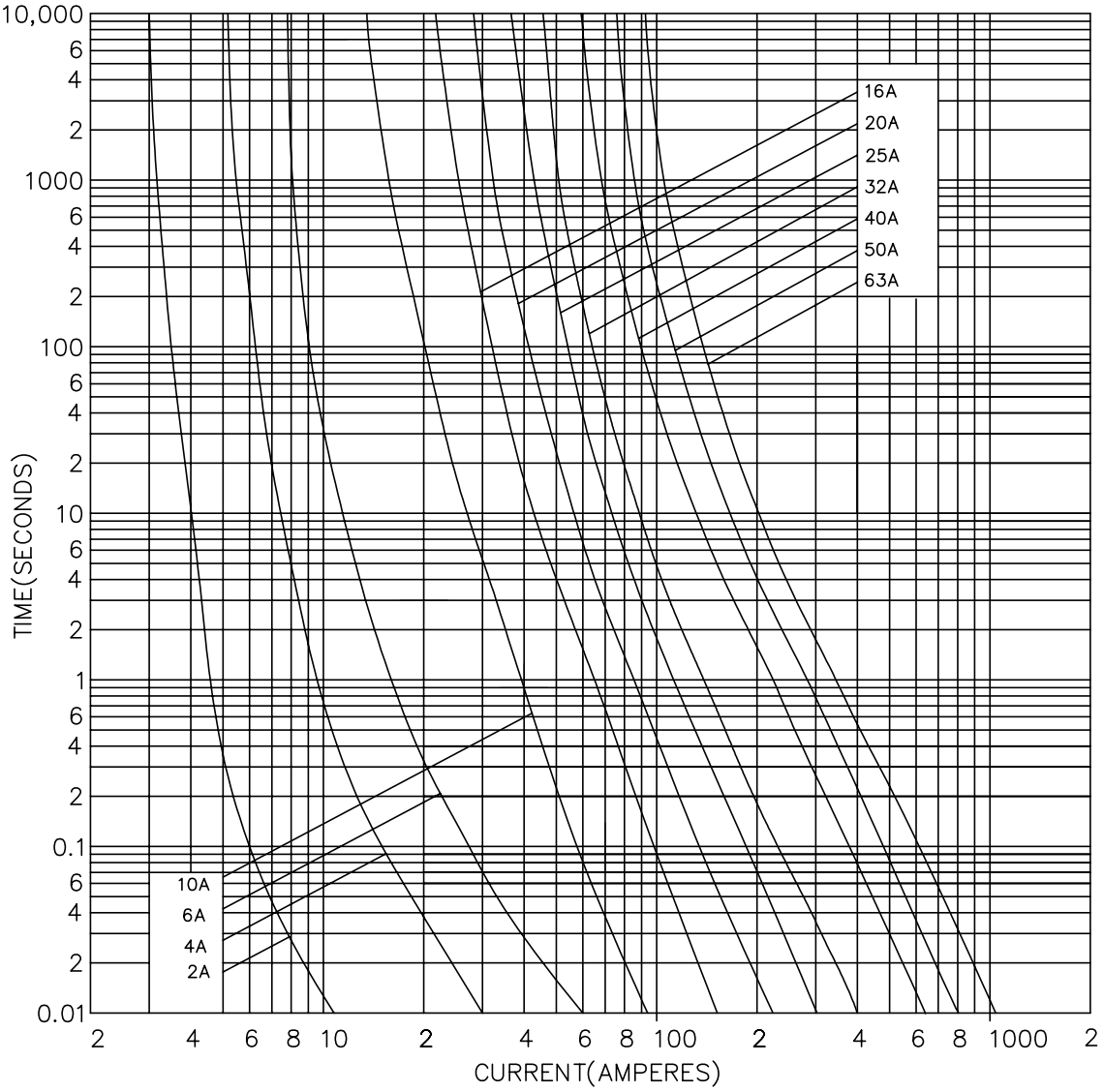

Time Current Curve Bolted Tag 32 to 800 A

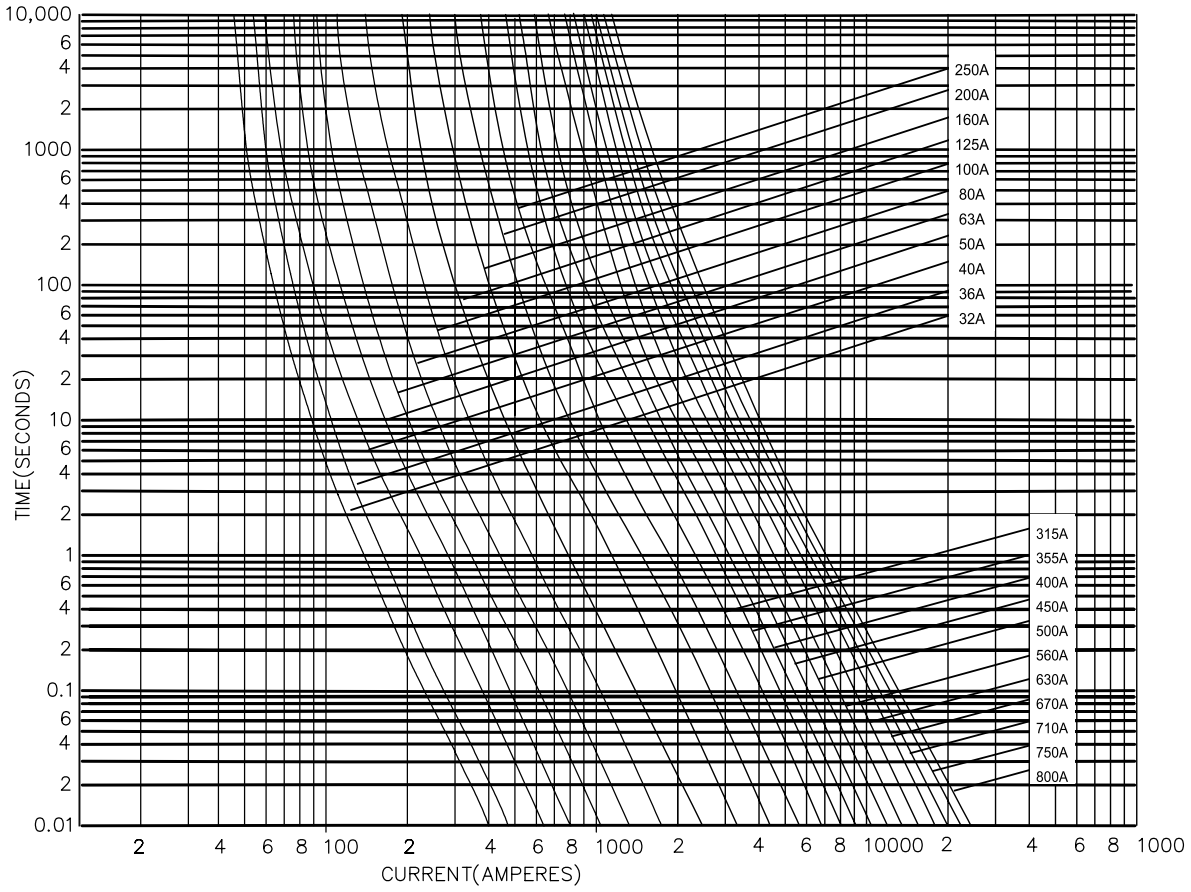

Time Current Curves “M” Motor Fuses 63 to 315 A

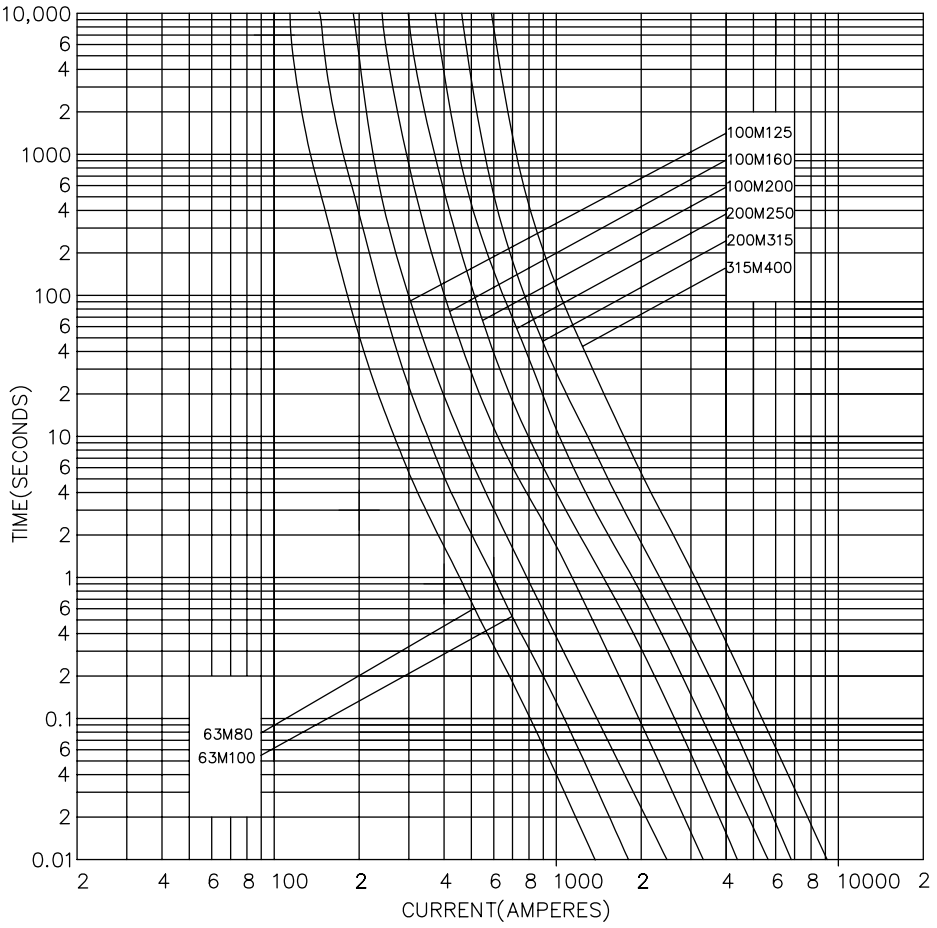

Time Current Curves (NTLU, NTXU)

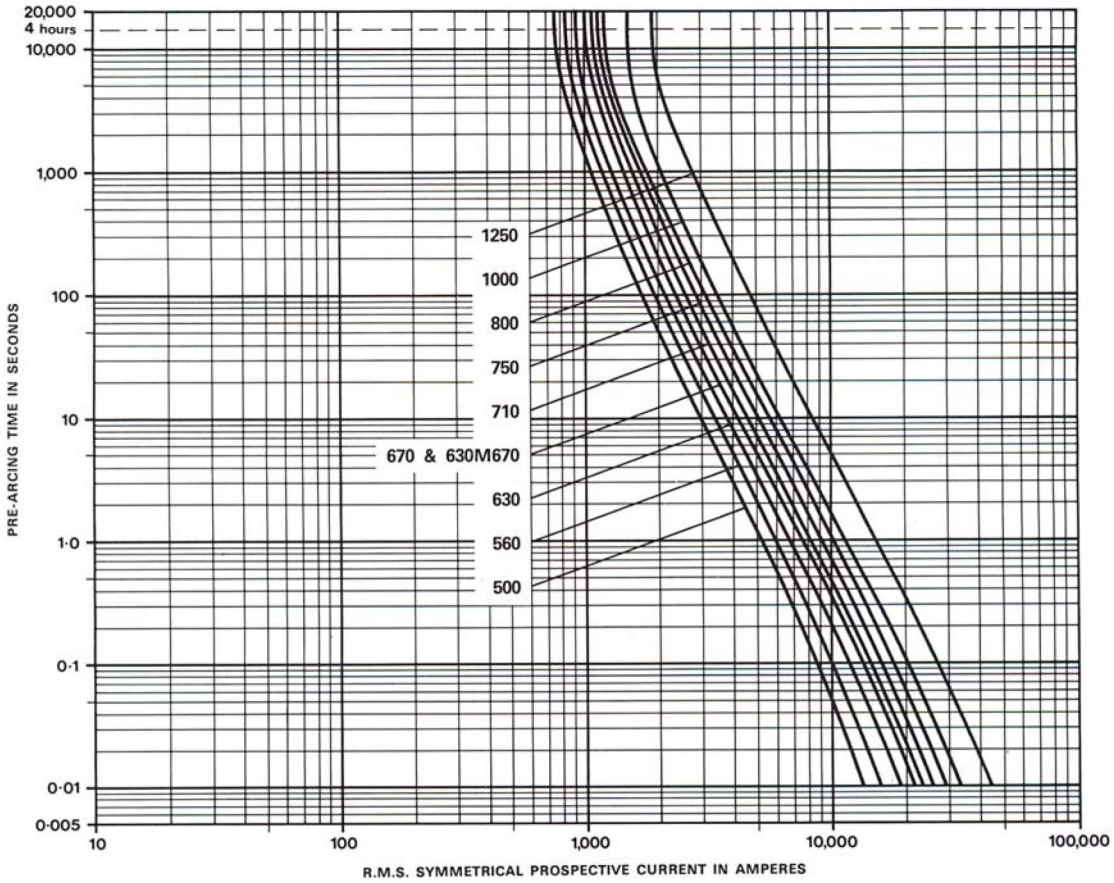

Cut-Off Characteristics 415 V AC 20 to 800 A

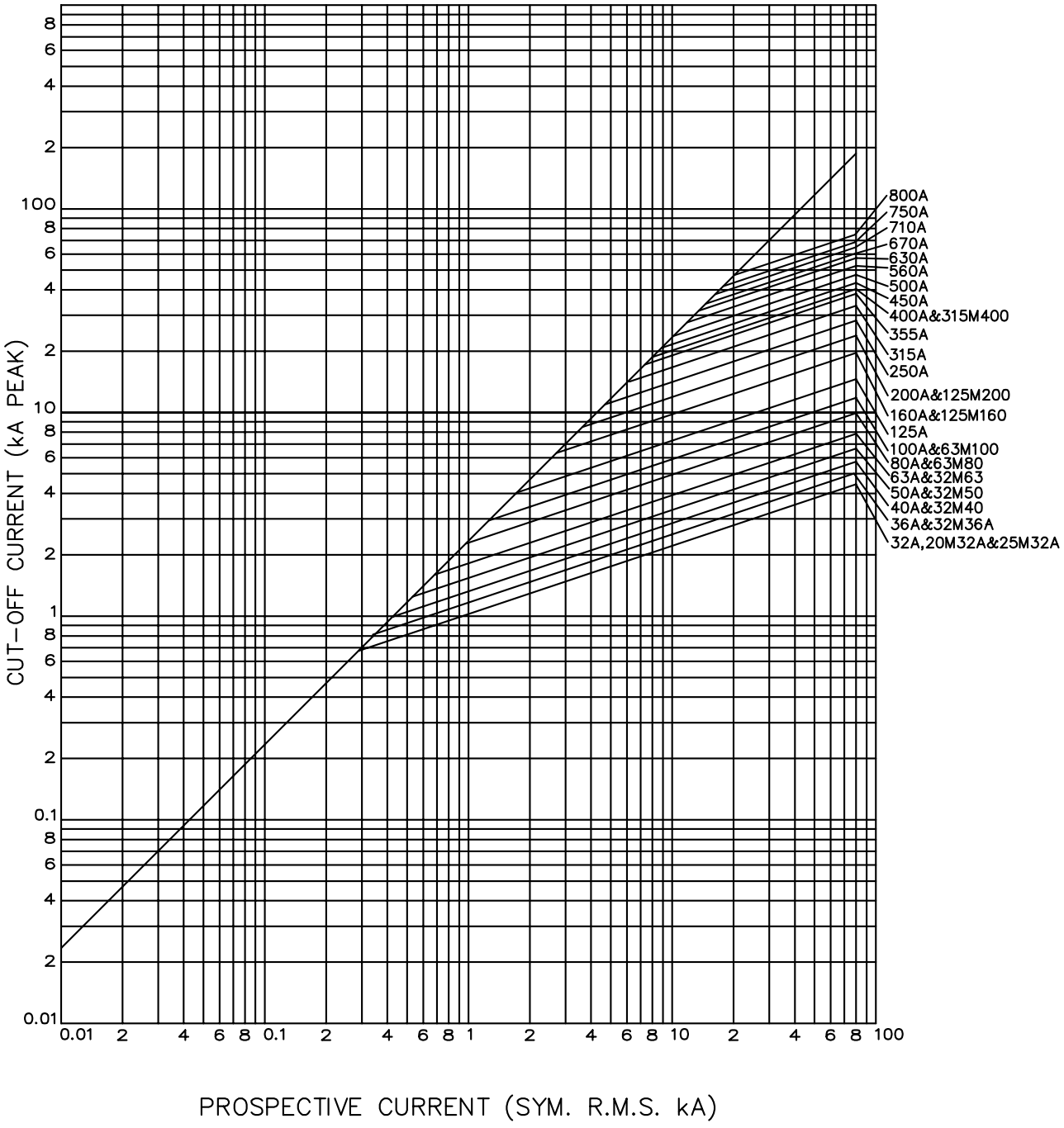

Energy Let Through 20 to 630 A

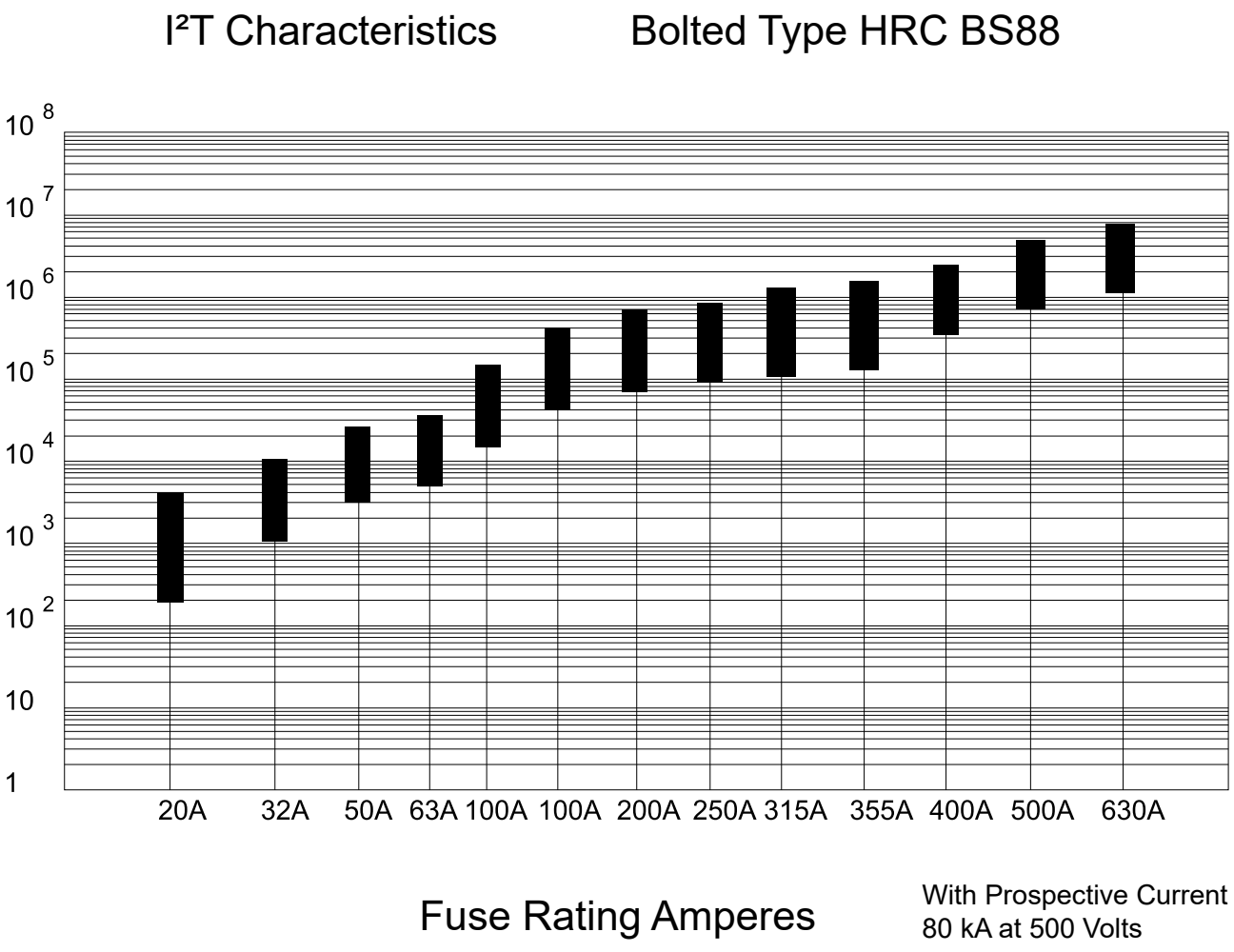

BS Standard Switch Fuses (20 to 1250 A)



- ✔ 90 degree rotatory open-close. Supplied with handle and shaft for external operation
- ✔ Handles and switches fuse bodies both include a padlock facility to lock OFF the switch for lockout tagout (LOTO) insulation
- ✔ Suits bolt-in fuse links 20 to 1250 A
- ✔ 100 kA fault rating
- ✔ Double breaking per pole (top or bottom) for isolated fuse removal
- ✔ Positive break indication
- ✔ Option: Fuse monitoring devices for remote blown fuse indication
- ✔ Complies to BS standard
- ✔ IP30
- ✔ Base mounting

General

Un, Nominal Operational Voltage, AC	690	V AC
Ue, Rated Operational Voltage, AC	690	V AC
Ue, Rated Operational Voltage, DC, Max	440	V DC
Uimp, Impulse Withstand Voltage	12	kV
Rated Peak Withstand Current 550 V	80	kA
Maximum Operating Temperature With Derating	70	°C max
IP Rating	IP30 (using shrouds)	
Standards Compliance	IEC 60947-3 AS/NZS 60947-3 IEC 60269-2-1 AS 60269.2.1	
Certifications	CCC KEMA	
Service Information	Product is not repairable. Please contact your local NHP sales representative for assistance.	

Dimensions for SSF BS Switch Fuses (20 A) (mm)

External front operation

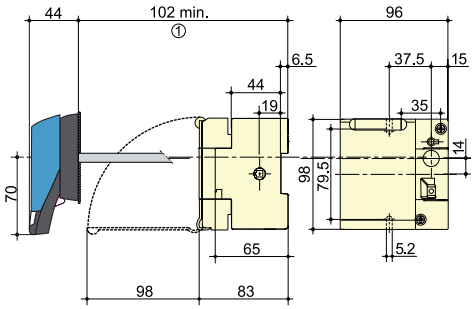

External side operation

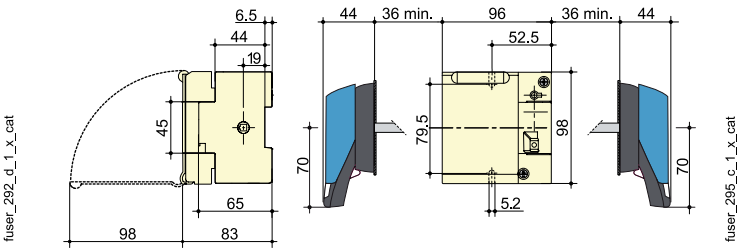

①With 1 U-type AC: 130 mm.
With 2 U-type AC: 155 mm.

Dimensions for SSF BS Switch Fuses (32 A) (mm)

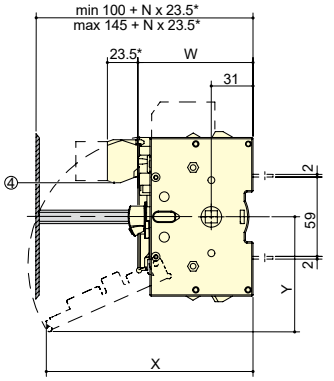

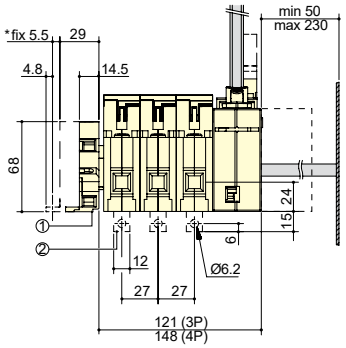

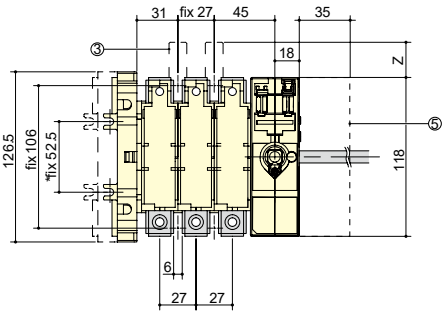

* to use if pre-break auxiliary contact number > 4

W: 84.5 + N x 23.5 for BS; 87 for DIN
X: 153 only for DIN
Y: 85 only for DIN
Z: 26 only for DIN

① S type auxiliary contact N/O + N/C to use if block number > 4.
② Rear connection (option).
③ 1 or 2 pre-break auxiliary contact (fuse blown indication).
④ 1 to 4 pre-break auxiliary contact for signalling.
⑤ Additonal contact holder for U type AC.

Dimensions for SSF BS (63 A) and DIN (63 A) Switch Fuses (mm)

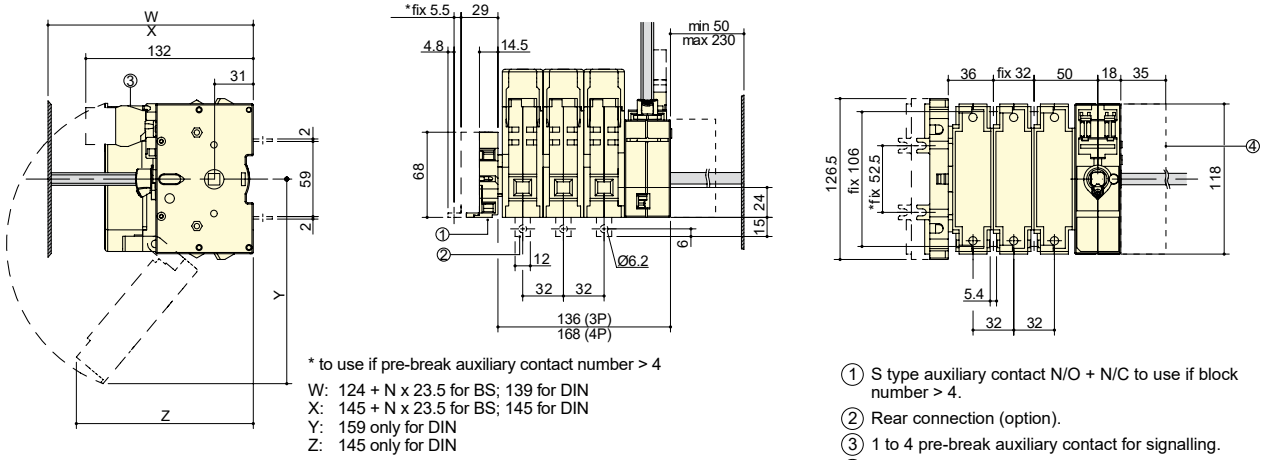

* to use if pre-break auxiliary contact number > 4

W: 124 + N x 23.5 for BS; 139 for DIN
X: 145 + N x 23.5 for BS; 145 for DIN
Y: 159 only for DIN
Z: 145 only for DIN

① S type auxiliary contact N/O + N/C to use if block number > 4.
② Rear connection (option).
③ 1 to 4 pre-break auxiliary contact for signalling.
④ Additonal contact holder for U type AC.

Door drilling

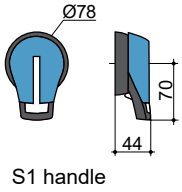

S1 handle

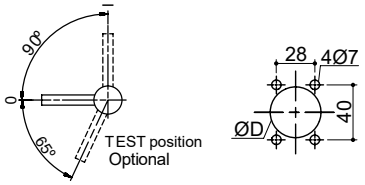

S type handle – front operation

Conventional fixing (from rear): D = 31 to 37 mm
Fast fixing (external, door closed): D = 37 mm

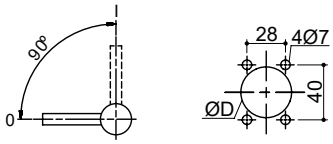

S type handle – side operation

Conventional fixing (from rear): D = 31 to 37 mm
Fast fixing (external, door closed): D = 37 mm

Dimensions for SSF BS (100 A) and DIN (125 A) Switch Fuses (mm)

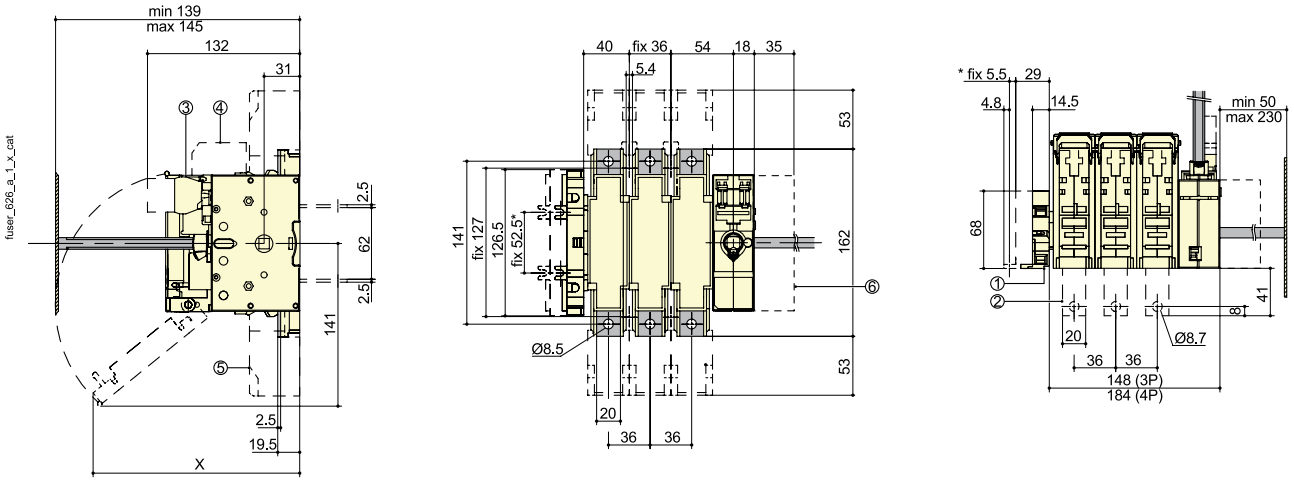

* to use if pre-break auxiliary contact number > 4
X 179 for BS88 / NFC and DIN 100 to 125 A
189 for NFC and DIN 125 to 160 A

① S-type auxiliary contact NO + NC to use if block number > 4
② Rear connection (option)
③ 1 to 4 pre-break auxiliary contact for signalisation
④ 1 or 2 pre-break auxiliary contact (fuse blown indication)
⑤ Terminal shrouds
⑥ Additional contact holder for U-type AC

Dimensions for SSF BS (160 A) and DIN (160 A) Switch Fuses (mm)

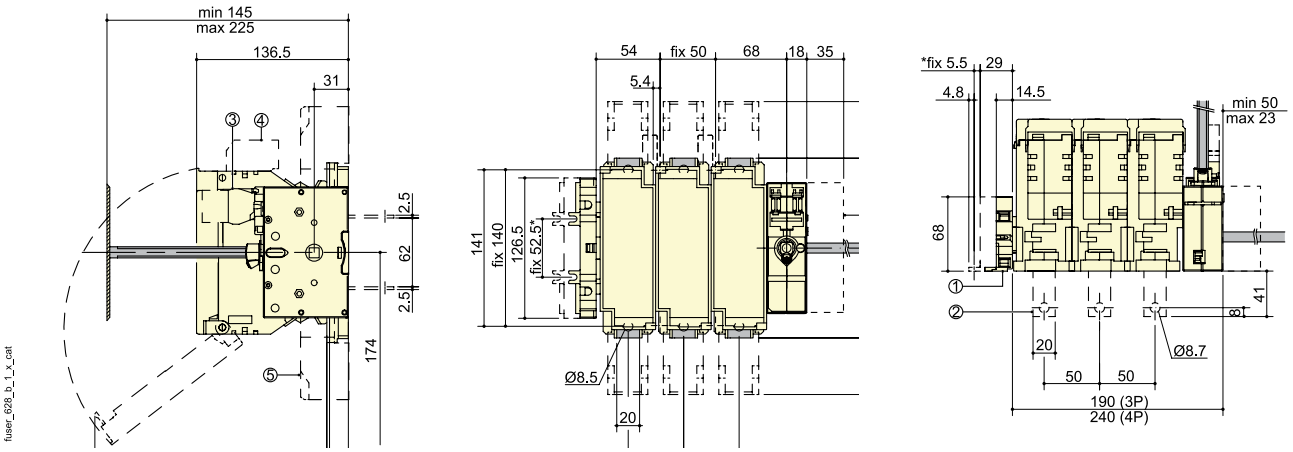

* to use if pre-break auxiliary contact number > 4
① S-type auxiliary contact NO + NC to use if block number > 4
② Rear connection (option)
③ 1 to 4 pre-break auxiliary contact for signalisation
④ 1 or 2 pre-break auxiliary contact (fuse blown indication)
⑤ Terminal shrouds
⑥ Additional contact holder for U-type AC

Dimensions for SSF BS (200 - 250 A) and DIN (250 A) Switch Fuses (mm)

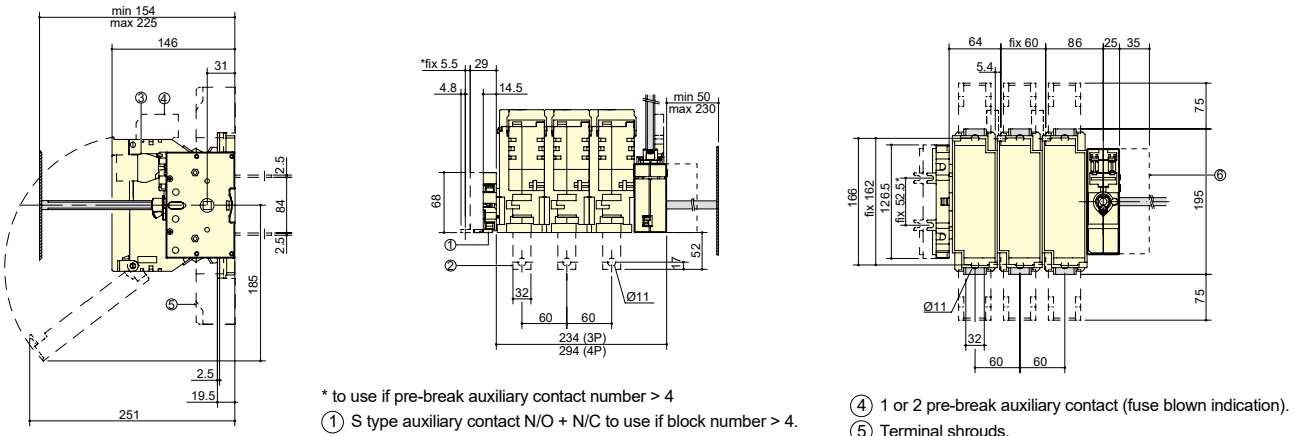

* to use if pre-break auxiliary contact number > 4
① S type auxiliary contact N/O + N/C to use if block number > 4.
② Rear connection (option).
③ 1 to 8 pre-break auxiliary contact for signalling.
④ 1 or 2 pre-break auxiliary contact (fuse blown indication).
⑤ Terminal shrouds.
⑥ Additional contact holder for U type AC.

Door drilling

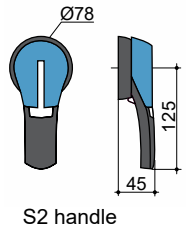

S2 handle

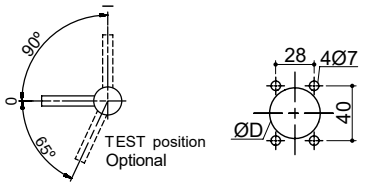

S type handle – front operation
Conventional fixing (from rear): D = 31 to 37 mm
Fast fixing (external, door closed): D = 37 mm

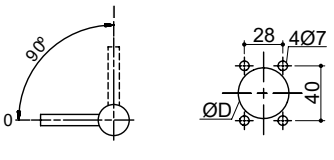

S type handle – side operation
Conventional fixing (from rear): D = 31 to 37 mm
Fast fixing (external, door closed): D = 37 mm

Dimensions for SSF BS (315 - 400 A) and DIN (400 A) Switch Fuses (mm)

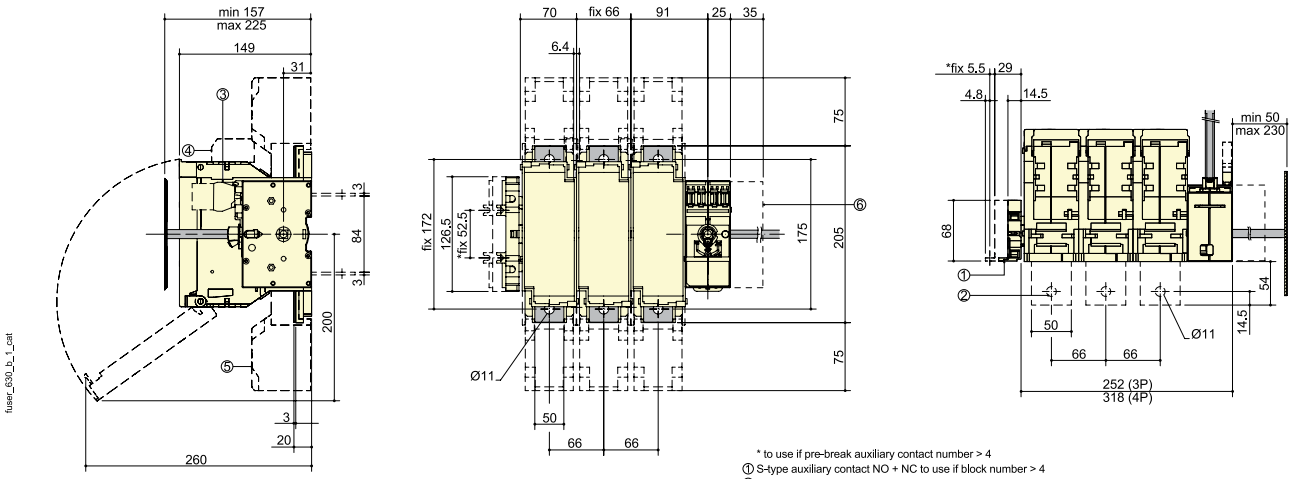

* to use if pre-break auxiliary contact number > 4
① S-type auxiliary contact NO + NC to use if block number > 4
② Rear connection (option)
③ 1 to 8 pre-break auxiliary contact for signalisation
④ 1 or 2 pre-break auxiliary contact (fuse blown indication)
⑤ Terminal shrouds
⑥ Additional contact holder for U-type AC

Dimensions for SSF BS (630 - 800 A) and DIN (630 - 800 A) Switch Fuses (mm)

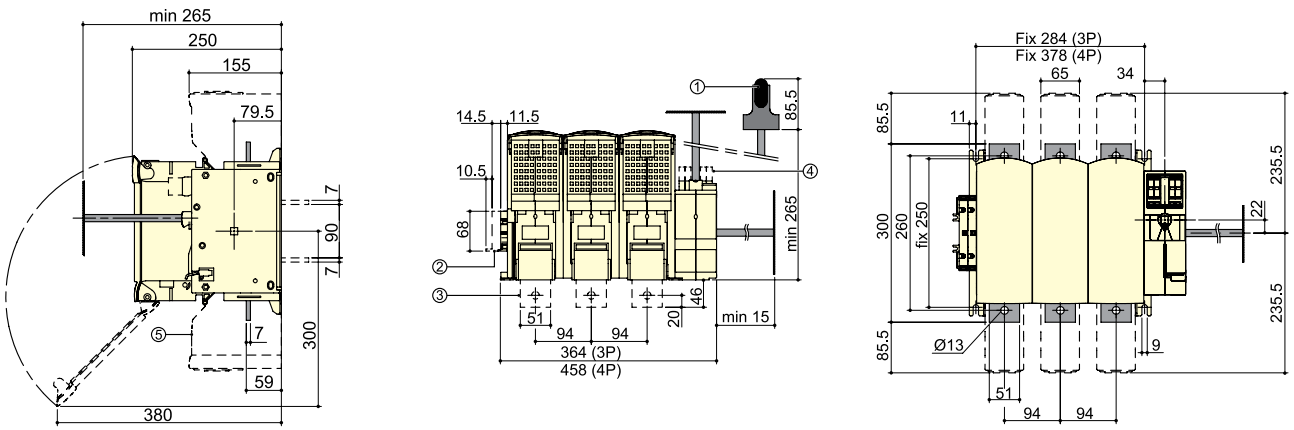

* to use if pre-break auxiliary contact number > 4

① Direct operation.
S type auxiliary contact N/O + N/C.

② Rear connection (option).

④ 1 to 8 pre-break auxiliary contact for signalling.

⑤ Terminal shrouds.

Dimensions for SSF BS (1250 A) and DIN (1250 A) Switch Fuses (mm)

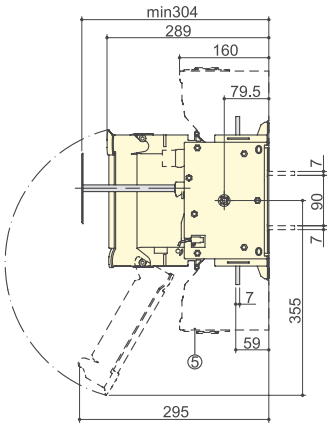

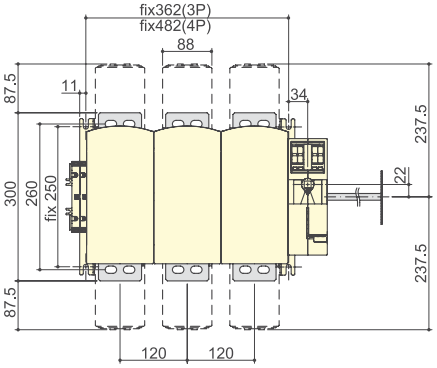

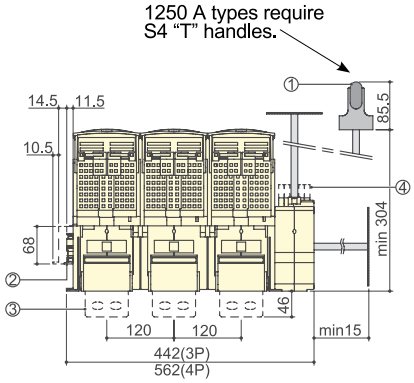

Direct operation

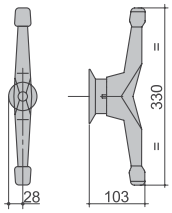

Connection terminals

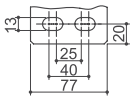

① Direct operation
② S type auxiliary contact N/O + N/C
③ Rear connection (option)
④ 1 to 8 pre-break auxiliary contact for signalling
⑤ Terminal shrouds

SSF BS Standard Switch Fuses

Front operated, base mount (supplied with external handle and 320 mm shaft).

Fuse Rating (A)	Cartridge Size	AC-23A (A @ 415 V)	AC-23A (kW @ 400 V)	Catalogue No. (3P)	Catalogue No. (4P)
20	A1	20	9	SSFBS20C3P	SSFBS20CP4P
32	A1	32	15	SSFBS323P	SSFBS324P
63	A2 - A3	63	30	SSFBS633P	SSFBS634P
100	A4	100	51	SSFBS1003P	SSFBS1004P
160	A4 - B1 - B2	160	80	SSFBS1603P	SSFBS1604P
200	B1 - B2	200	100	SSFBS2003P	SSFBS2004P
250	B1 - B2 - B3	250	132	SSFBS2503P	SSFBS2504P
315	B1 - B2 - B3	315	160	SSFBS3153P	SSFBS3154P
400	B1 - B2 - B3 - B4	400	220	SSFBS4003P	SSFBS4004P
630	C1 - C2	630	355	SSFBS6303P	SSFBS6304P
800	C1 - C2 - C4	800	450	SSFBS8003P	SSFBS8004P
1250	D1	1000	560	SSFBS12503P	SSFBS12504P

General (20 - 160 A)

				20 A	32C A	32 A	63 A	100 A	125 A	160 A	160 A
DIN or BS Fuse Types				BS	BS	BS	DIN / BS	BS	DIN / BS	BS	DIN
Fuse Types, gG General Purpose AS 60269.2.1:2005, AS/NZS 60269.2.1:2001	DIN 43620	–	–	–	–	–	00C	–	0	–	0
	BS 88	–	–	A1	A1	A1	A2 - A3	A4	–	B1 - B2	–

Ratings Data (20 - 160 A)

				20 A	32C A	32 A	63 A	100 A	125 A	160 A	160 A
Rated Insulation Voltage	–	–	V	800	800	750	750	750	750	750	750
Rated Impulse Withstand Voltage	–	–	kV	8	8	8	8	8	8	8	8
AC Rated Operational Current	AC 21 A	400 V	A	20	32	32	63	100	125	160	160
		690 V	A	20	32	32	63	100 [1]	125 [1]	160 [1]	160 [1]
	AC 22 A	400 V	A	20	32	32	63	100	125	160	160
		690 V	A	20	32	32	63	100 [1]	125 [1]	160 [1]	160 [1]
	AC 23 A	400 V	A	20	32	32	63	100	125	160	160
		690 V	A	20	32	32	63	100 [1]	100 [1]	125 [1]	125 [1]
DC Rated Operational Current / Poles in Series	DC 21 A	220 V	A	–	–	32	63	100	125	160	160
		440 V	A	–	–	32 [2]	63 [2]	100 [2]	125 [2]	160 [2]	160 [2]
	DC 22 A	220 V	A	–	–	32	63	100	125	160	160
		440 V	A	–	–	32 [2]	63 [2]	100 [2]	125 [2]	160 [2]	160 [2]
	DC 21 A	220 V	A	–	–	32	40	100	100	125	125
		440 V	A	–	–	32 [2]	40 [2]	100 [2]	100 [2]	160 [2]	125 [2]
Operational Power	Without Pre-break AC	440 V	kW	9	15	15	30	51	63	80	80
	Without Pre-break AC	690 V	kW	15	25	25	55	90	90	110	110
Rated Capacitor Power	–	–	kVAr	8	15	15	28	45	55	75	75

Notes

1) With terminal shrouds/screen.

2) 4 pole device with 2 poles in series by polarity.

240 / 415 V ratings suitable for use on 230 / 400 V in accordance with AS 60038: 2012.

Ratings to AS/NZS 60947-3 and IEC 60947-3

General (200 - 1250 A)

				200 A	250 A	315 A	400 A	630 A	800 A	1250 A
DIN or BS Fuse Types				BS	DIN / BS	BS	DIN / BS	DIN / BS	DIN / BS	DIN /BS
Fuse Types, gG General Purpose AS 60269.2.1:2005, AS/NZS 60269.2.1:2001	DIN 43620	–	–	–	1	–	2	3	3	4
	BS 88	–	–	B1, B2	B1, B2, B3	B1, B2, B3	B1, B2, B3, B4	C1, C2	C1, C2, C3	D1

Ratings Data (200 - 1250 A)

				200 A	250 A	315 A	400 A	630 A	800 A	1250 A
Rated Insulation Voltage			V	750	750	800	800	1000	1000	1000
Rated Impulse Withstand Voltage			kV	8	8	8	8	12	12	12
AC Rated Operational Current	AC 21 A	400 V	A	200	250	315	400	630	800	1250
		690 V	A	200 [1]	250 [1]	315 [1]	315	500	800	800
	AC 22 A	400 V	A	200	250	315	400	630	800	1250
		690 V	A	200 [1]	250 [1]	315 [1]	315	500	800	800
	AC 23 A	400 V	A	200	250	315	400	630	800	1000
		690 V	A	200 [1]	250 [1]	250 [1]	250	315	630	630
DC Rated Operational Current / Poles in Series	DC 21 A	220 V	A	200	250	250	315	315	800	1250
		440 V	A	250 [2]	250 [2]	250 [2]	315	315	800 [2]	1000 [2]
	DC 22 A	220 V	A	200	250	250	315	315	800	1250
		440 V	A	250 [2]	250 [2]	250 [2]	315	315	800 [2]	1000 [2]
	DC 21 A	220 V	A	200	200	200	200	400	800	1250
		440 V	A	200 [2]	200 [2]	200 [2]	250	315	800 [2]	1000 [2]
Operational Power	Without Pre-break AC	440 V	kW	100	132	160	220	355	63	560
	Without Pre-break AC	690 V	kW	150	220	222	220	295	90	400
Rated Capacitor Power	–	–	kVAr	90	115	145	185	290	365	460

Notes

1) With terminal shrouds/screen.

2) 4 pole device with 2 poles in series by polarity.

240 / 415 V ratings suitable for use on 230 / 400 V in accordance with AS 60038: 2012.

Ratings to AS/NZS 60947-3 and IEC 60947-3

Connection (20 - 160 A)

				20 A	32C A	32 A	63 A	100 A	125 A	160 A	160 A
Connection Cable Size (Min. / Max.)	–	–	mm^2	2.5 / 16	2.5 / 16	6 / 25	10 / 25	25 / 95	35 / 95	50 / 95	50 / 95

Physical (20 - 160 A)

				20 A	32C A	32 A	63 A	100 A	125 A	160 A	160 A
Mechanical Endurance	–	–	Ops	20000	20000	10000	10000	10000	10000	10000	10000
Weight (3 Pole)	–	–	Kg	0.5	0.5	1.0	1.3	1.8	1.9	2.5	2.5

Short-Circuit Capacity (20 - 160 A)

				20 A	32C A	32 A	63 A	100 A	125 A	160 A	160 A
Short Circuit Capacity Switch-Fuse Cut-Off Current (kA Peak)	–	400 V	kA	5.5	5.5	9	10.6	20	20	20	22.7
Fuse Protected Short Circuit Withstand AC DIN or BS (kA RMS Prospective)	–	400 V	kA	80	80	80	80	80	–	50	80
	–	Fuse	A	20	32	32	63	100	–	160	160

Notes

240 / 415 V ratings suitable for use on 230 / 400 V in accordance with AS 60038: 2012.

Ratings to AS/NZS 60947-3 and IEC 60947-3

Connection (200 - 1250 A)

				200 A	250 A	315 A	400 A	630 A	800 A	1250 A
Connection Cable Size (min. / max.)	–	–	mm^2	94 / 240	94 / 240	185 / 240	185 / 240	2 x 150 / 2 x 300	2 x 185 / 2 x 300	4 x 185

Physical (200 - 1250 A)

				200 A	250 A	315 A	400 A	630 A	800 A	1250 A
Mechanical Endurance	–	–	Ops	10000	10000	10000	10000	8000	8000	8000
Weight (3 Pole)	–	–	Kg	3.8	3.8	4.8	4.8	18.7	19.8	25.0

Short-Circuit Capacity (200 - 1250 A)

				200 A	250 A	315 A	400 A	630 A	800 A	1250 A
Short Circuit Capacity Switch-Fuse Cut-Off Current (kA Peak)	–	400 V	kA	32.5	32.5	40	40	70	80	90
Fuse Protected Short Circuit Withstand AC DIN or BS (kA RMS Prospective)	–	400 V	kA	80	80	80	80	80	80	–
	–	Fuse	A	200	250	315	400	630	800	–

Notes

240 / 415 V ratings suitable for use on 230 / 400 V in accordance with AS 60038: 2012.

Ratings to AS/NZS 60947-3 and IEC 60947-3

Socomec Switch Fuse Direct Mount Handles

Direct Mount Handles

Switch fuse bodies can be padlocked OFF



Item Description	Catalogue No.
Direct Mount Handle Suits SSF 20 A - 32 A	36294012
Direct Mount Handle Suits SSF 63 A - 400 A	36297910
Direct Mount Handle Suits SSF 630 A - 800 A	38996011
Direct Mount Handle Suits SSF 800 A - 1250 A	38997011

Socomec Switch Fuse Auxiliaries

Early Break Operation

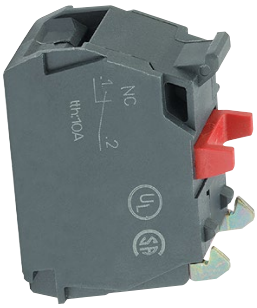

Item Description	Catalogue No.
Auxiliary 1 N/O suits Switch Fuse SSF 20 - 32 A	39990701
AUX 1 N/C suits Switch Fuse VLB32 - 40 and 125 - 500, SSF 63 - 400 A	39990702



Item Description	Catalogue No.
Auxiliary Side 1 N/O / 1 N/C 1st Pos. suits Switch Fuse SSF 63 - 800 A	39990041
Auxiliary Side 1 N/O / 1 N/C 2nd Pos. suits Switch Fuse SSF 800 - 1250 A	39990042

Socomec Switch Fuse Terminal Shrouds

- Top or bottom touch protection from direct contact with terminals or connection parts
- Perforations allow remote thermgraphic inspection without the need to remove the shrouds
- The shrouds provide phase protection barriers between phases
- The terminals shrouds consist of clip-together 1 pole covers, and can be converted to 3 or 4 pole types
- IP20 rating from front



Item Description	Catalogue No.
Terminal Shroud 3 Pole suits Switch Fuse 630 A and 800 A	38983080
Terminal Shroud 3 Pole suits Switch Fuse 1250 A	38983120
Terminal Shroud 4 Pole suits Switch Fuse 630 A and 800 A	38984080
Terminal Shroud 4 Pole suits Switch Fuse 1250 A	38984120
Terminal Shroud 3 Pole suits Switch Fuse VLB125 - 200 SSF100 - 160	39983016
Terminal Shroud 4 Pole suits Switch Fuse VLB125 - 200 SSF100 - 160	39984016
Terminal Shroud 3 Pole suits Switch Fuse VLB250 - 500 SSF200 - 400	39983025
Terminal Shroud 4 Pole suits Switch Fuse VLB250 - 500 SSF200 - 400	39984025

Socomec Switch Fuse Solid Neutral Modules

Solid links can be used, when a user wants a switch fuse to be an isloator, and when fuse links are not fitted. Performs the function of an add-on, unswitched neutral pole.



Item Description	Catalogue No.
Solid Neutral Module Suits Switch Fuse 32 A	36299227
Solid Neutral Module Suits Switch Fuse 63 A	36299232
Solid Neutral Module Suits Switch Fuse 100 A	36299236
Solid Neutral Module Suits Switch Fuse 160 A	36299250
Solid Neutral Module Suits Switch Fuse 200 A and 250 A	36299260
Solid Neutral Module Suits Switch Fuse 315 A and 400 A	36299266
Solid Neutral Module Suits Switch Fuse 630 A and 800 A	36299294

DIN Solid Links

Din Fuse Solid Link

A solid link can be installed in a switch fuse, when a fuse is not required.



Item Description	Catalogue No.
Fuse DIN Solid Links 160 A Size 00C	64200000
Solid Link Fuse DIN 160 A Size 00	64210000
Fuse DIN Solid Links 250 A Size 1	64210001
Fuse DIN Solid Links 400 A Size 2	64210002
Fuse DIN Solid Links 630 A Size 3	64210003
Fuse DIN Solid Links 1250 A Size 4	64410005

Catalogue Number	Page
2	
202091363	36
202091380	36
2020913100	36
2020913125	36
204771306	36
204771310	36
204771316	36
204771320	36
204771325	36
204771332	36
204771335	36
204771340	36
204771350	36
202111316	36
202111320	36
202111325	36
202111332	36
202111335	36
202111340	36
202111350	36
202111363	36
202111380	36
2021113100	36
2021113125	36
2021113160	36
2021113200	36
2021113250	36
202121335	37
202121340	37
202121350	37
202121363	37
202121380	37
2021213100	37
2021213125	37
2021213160	37
2021213200	37
2021213224	37
2021213250	37
2021213300	37
2021213315	37
2021213355	37
2021213400	37
2021313300	37
2021313315	37
2021313355	37
2021313400	37
2021313425	37
2021313500	37
2021313630	37
202090863	38
202090880	38
2020908100	38
2020908125	38
2020908160	38
204770802	38
204770804	38
204770806	38
204770810	38
204770816	38
204770820	38
204770825	38
204770832	38
204770835	38
204770840	38
202110816	38
202110820	38
202110825	38
202110835	38
202110840	38
202110850	38
202110863	38
202110880	38
2021108100	38
2021108125	38
2021108160	38
2021108200	38
2021108224	38
2021108250	38
202120835	39
202120850	39
202120863	39
202120880	39
2021208100	39
2021208125	39
2021208160	39
2021208200	39
2021208250	39
2021208315	39
2021208355	39
2021208400	39
2021308315	39
2021308400	39
2021308500	39
2021308630	39
204771302	36
204771304	36
3	
36294012	75,124
36297910	75,124
38996011	75,124
38997011	75,124
39990041	75,124
39990042	75,124
39990701	75,124
39990702	75,124
38983080	76,125
38983120	76,125
38984080	76,125
39983016	76,125
39984016	76,125
39983025	76,125
39984025	76,125
38984120	76,125
36299227	76,125
36299232	76,125
36299236	76,125
36299250	76,125
36299260	76,125
36299266	76,125
36299294	76,125
36294012	75,124
36297910	75,124
38996011	75,124
38997011	75,124
39990041	75,124
39990042	75,124
39990701	75,124
38983080	76,125
38983120	76,125
38984080	76,125
39983016	76,125
39984016	76,125
39983025	76,125
39984025	76,125
38984120	76,125
36299227	76,125
36299232	76,125
36299236	76,125
36299250	76,125
36299260	76,125
36299266	76,125
36299294	76,125
39990702	75,124

Catalogue Number	Page
6	
60130001	12
60130004	12
60130006	12
60130016	12
60130020	12
60230001	12
60230004	12
60230006	12
60230010	12
60230016	12
60520004	12
60520016	12
60520020	12
60520025	12
60520032	12
60520040	12
60520050	12
60530002	13
60530004	13
60530006	13
60530016	13
60530020	13
60530032	13
60530040	13
65001010	45
65001110	45
65011011	45
65011111	45
65011012	45
65011112	45
65011013	45
65011113	45
65001030	45
65001130	45
65011031	45
65011131	45
65011032	45
65011132	45
65011033	45
65011133	45
65101010	46
65101030	46
65111011	46
65111031	46
65111012	46
65111032	46
65111013	46
65111033	46
65000031	47
65000032	47
65000033	47
65000020	47
65000022	47
65000023	47
65000001	47
65000003	47
65000004	47
65000010	47
65000012	47
65000013	47
65000014	47
64200000	77,126
64210000	77,126
64210001	77,126
64210002	77,126
64210003	77,126
64410005	77,126
64200000	77,126
64210000	77,126
64210001	77,126
64210002	77,126
64210003	77,126
64410005	77,126
60230008	12
C	
CMC101	21
CMC102	21
CMC103	21
CMC104	21
CMC141	21
CMC142	21
CMC143	21
CMS221	21
CMS222	21
CMS223	21
D	
DINF	44
M	
MBP-000-100A-3P	55
MBP-00-160A-3P	55
MBP-1-250A-3P	55
MBP-2-400A-3P	55
MBP-3-630A-3P	55
MBB-00-160A-3P	61
MBB-000-100A-3P	61
MBB-1-250A-3P	61
MBCC1	64
MBCC2	64
N	
N0006	25
N00010	25
N00016	25
N00020	25
N00035	25
N00040	25
N00050	25
N00063	25
N00080	25
N000100	25
N125	25
N135	25
N150	25
N163	25
N180	25
N1100	25
N1125	25
N1160	25
N1200	25
N1224	25
N1250	25
N280	26
N2100	26
N2125	26
N2160	26
N2200	26
N2224	26
N2250	26
N2315	26
N2355	26
N2400	26
N3400	26
N3500	26
N3630	26
NV32BBS	79
NV32FW	79
NV32FWW	79
NV63BBS	79
NV63FW	79
NC32FW	82
NC63FW	82

Catalogue Number	Page
NC125FW	82
NNS2	86
NNS4	86
NNS6	86
NNS10	86
NNS16	86
NNS20	86
NNS25	86
NNS32	86
NNS20M25	86
NES20	86
NES25	86
NES32	86
NES40	86
NES50	86
NES63	86
NNIT2	94
NNIT4	94
NNIT6	94
NNIT10	94
NNIT16	94
NNIT20	94
NNIT25	94
NNIT32	94
NNIT20M25	94
NNIT20M32	94
NNIT32M40	94
NNIT32M50	94
NNIT32M63	94
NTIA2	94
NTIA4	94
NTIA6	94
NTIA10	94
NTIA16	94
NTIA20	94
NTIA25	94
NTIA32	94
NTIA32M40	94
NTIA32M50	94
NTIA32M63	94
NTIS36	94
NTIS40	94
NTIS50	94
NTIS63	95
NTIS80	95
NTIS63M80	95
NTIS63M100	95
NOS100	95
NOS100M125	95
NOS100M160	95
NTCP80	95
NTCP100	95

Catalogue Number	Page
NTCP100M125	95
NTCP100M160	95
NTFP125	95
NTFP160	95
NTFP200	95
NTFP200M250	95
NTBC2	105
NTBC4	105
NTBC6	105
NTBC10	105
NTBC16	105
NTBC20	105
NTBC25	105
NTBC32	105
NTBC40	105
NTBC50	105
NTBC63	105
NTBC63M80	105
NTBC63M100	105
NTC80	105
NTC100	105
NTC100M125	105
NTC100M160	105
NTF125	105
NTF160	105
NTF200	105
NTF200M250	105
NTF200M315	105
NTKF250	105
NTKF315	105
NTKF315M400	105
NTKM250	105
NTKM315	105
NTMF355	105
NTMF400	106
NTM355	106
NTM400	106
NTTM450	106
NTTM500	106
NTTM560	106
NTTM630	106
NTLM710	106
NTLM800	106
NTXU1000	106
NTXU1250	106
N00025	25
N00032	25
N116	25
N120	25
N132	25
N140	25
N235	25

Catalogue Number	Page
N240	25
N250	26
N263	26
N2300	26
N3315	26
N3355	26
N3425	26
N4800	26
N4900	26
N41250	26
N41600	26
NNS8	86
NNS10M16	86
NNS16M20	86
NNS25M32	86
NNS32M40	86
NNS32M50	86
NNS32M63	86
NOS83	95

S

SSFDN633P	70
SSFDN1253P	70
SSFDN1603P	70
SSFDN2503P	70
SSFDN4003P	70
SSFDN6303P	70
SSFDN8003P	70
SSFDN12503P	70
SSFDN634P	70
SSFDN1254P	70
SSFDN1604P	70
SSFDN2504P	70
SSFDN4004P	70
SSFDN6304P	70
SSFDN8004P	70
SSFDN12504P	70
SSFBS20C3P	119
SSFBS323P	119
SSFBS633P	119
SSFBS1003P	119
SSFBS1603P	119
SSFBS2003P	119
SSFBS2503P	119
SSFBS3153P	119
SSFBS4003P	119
SSFBS6303P	119
SSFBS8003P	119
SSFBS12503P	119
SSFBS324P	119

Catalogue Number	Page
SSFBS634P	119
SSFBS1004P	119
SSFBS1604P	119
SSFBS2004P	119
SSFBS2504P	119
SSFBS3154P	119
SSFBS4004P	119
SSFBS6304P	119
SSFBS8004P	119
SSFBS12504P	119
SSFBS20CP4P	119

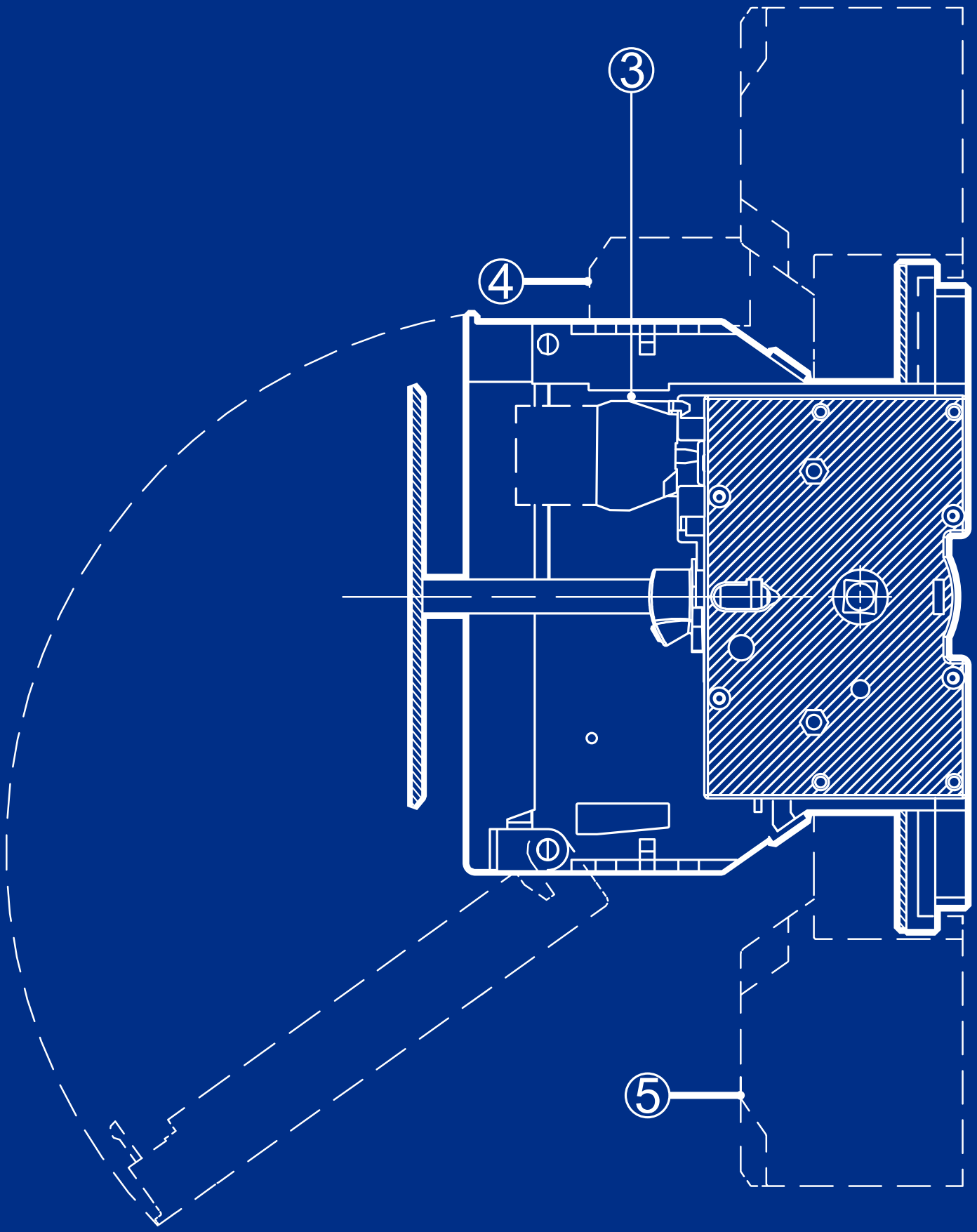

AUSTRALIA

nhp.com.au
SALES 1300 NHP NHP
sales@nhp.com.au

NEW ZEALAND

nhpnz.co.nz
SALES 0800 NHP NHP
sales@nhp-nz.com

NHP Electrical Engineering Products

A.B.N. 84 004 304 812
V.2022-06-09
© Copyright NHP 2022