ISOSW110PROLB

NHP ISO Surface Switch, 2 Pole 10A 250V AC, w/o Base, Resistant Orange

ISO
INDUSTRIAL PLUGS AND SOCKETS



Component type	Switch disconnector
Range	ISO
Model	N/A
Product status	Existing

The often overlooked essentials that are always indispensable. Choose from NHP's range of 400+ industrial, isolating and high-current plugs, sockets and switches available for a wide breadth of applications.

ELECTRICAL	Rated operating voltage Ue	250 V
	Rated uninterrupted current Iu	10 A
	Number of poles	2
	Frequency	50 Hz
	M rating	M100
	Rated operation current Ie at AC-23a, 250 V	10 A
	Rated operating voltage	250 V
CONSTRUCTION	Material housing	Plastic
	Colour control element	Grey
	Degree of protection (IP), front side	IP66
	Degree of protection (NEMA)	4X
MECHANICAL	Padlock locking	Yes
DIMENSIONS	Height	95 mm
	Width	95 mm
	Depth	54 mm
	Connectable conductor cross section	1.5-6 mm²

Published on 02 November 2026

ISOSW110PROLB

NHP ISO Surface Switch, 2 Pole 10A 250V AC, w/o Base, Resistant Orange

ISO
INDUSTRIAL PLUGS AND SOCKETS

DIMENSIONAL DIAGRAM

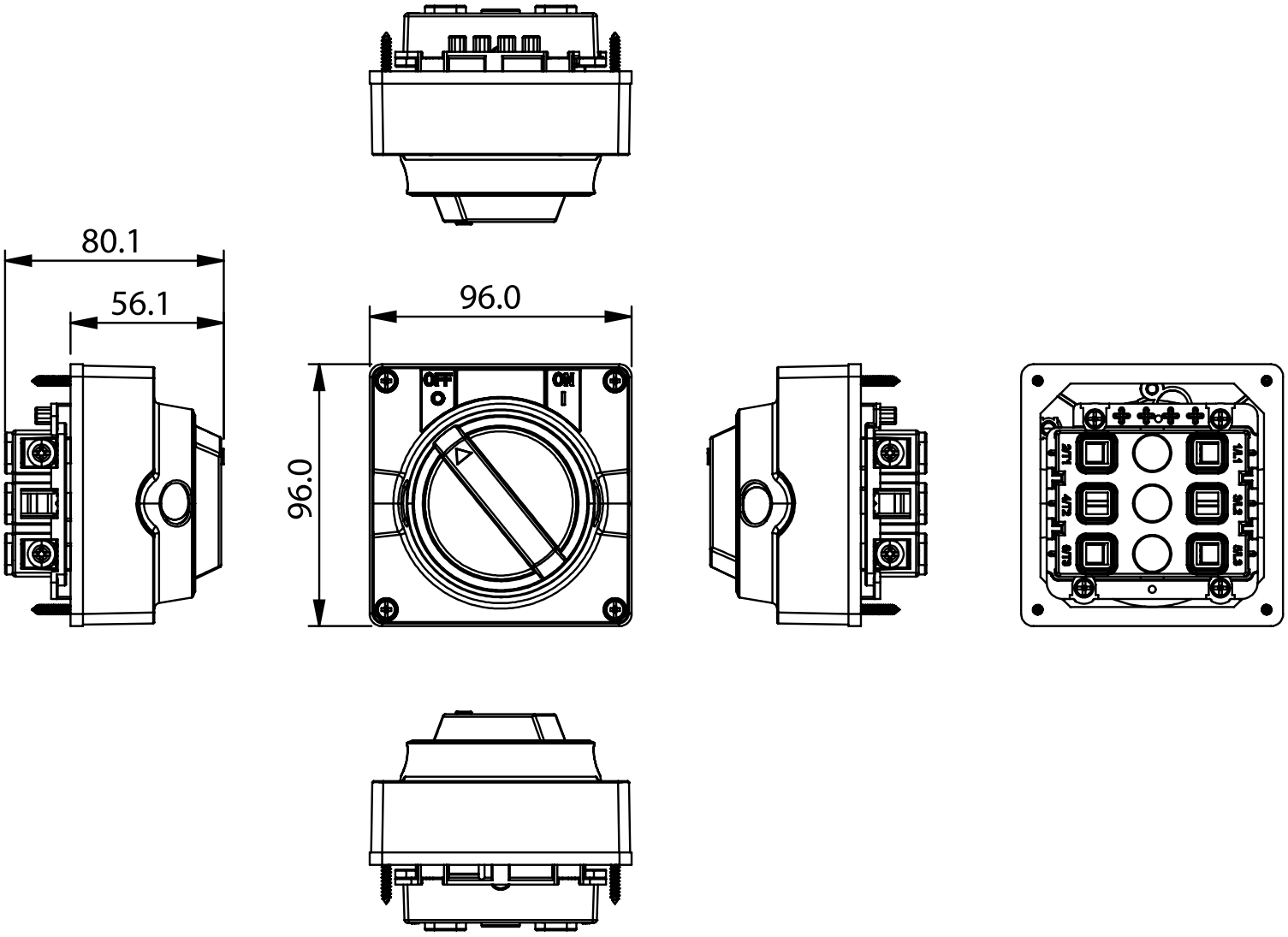

Published on 02 November 2026