95734200

Socomec ATyS Automatic Transfer Switch - ATyS p, Advanced Integrated Logic, 4 Pole 2000A

AUTOMATIC TRANSFER SWITCHES

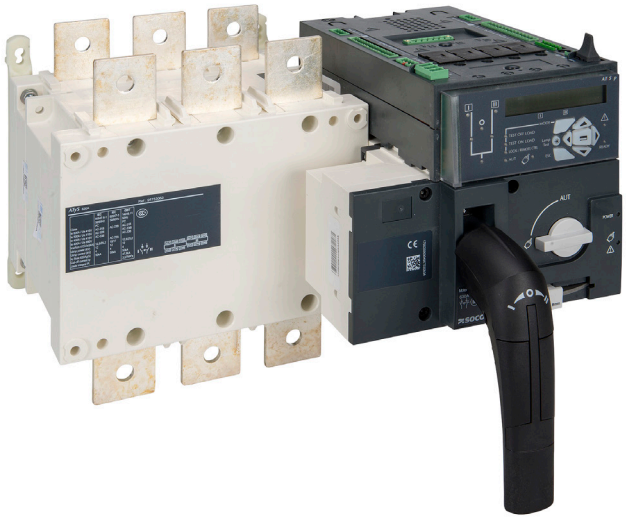

Component type	Switch disconnector
Range	ATyS Automatic
Model	N/A
Product status	Existing

The ATyS g and ATyS p are a range of 125A to 3200A automatic transfer switches enabling on-load changeover and monitoring between separate three-phase or single-phase sources, configured via potentiometers and DIP switches (ATyS g) or an integrated keypad and LCD display (ATyS p), designed for mains-mains and mains-genset applications. Optional plug-in communication and I/O modules available.

ELECTRICAL

Rated operating voltage Ue	1000 V
Max. rated operation voltage Ue AC	1000 V
Rated permanent current at AC-21, 400 V	2000 A
Rated control supply voltage Us at AC 50HZ	400-690 V
Rated uninterrupted current Iu	2000 A
Number of poles	4
Rated operation power at AC-23, 400 V	900 kW
Rated short-time withstand current Icw	50 kA
Rated insulation voltage Ui	1000 V
Type of control element	Other
Type of electrical connection of main circuit	Bolt connection
Rated operating voltage	400-690 V
Rated permanent current at AC-23, 400 V	1600 A
Switching power at 400 V	12800 kW
Number of auxiliary contacts as normally closed contact	0
Number of auxiliary contacts as normally open contact	3
Number of auxiliary contacts as change-over contact	4
Motor drive optional	No
Motor drive integrated	Yes
Voltage release optional	No

CONSTRUCTION

Device construction	Built-in device fixed built-in technique
Colour control element	Other
Degree of protection (IP), front side	IP20
Version as main switch	Yes

Published on 04 August 2026

95734200

Socomec ATyS Automatic Transfer Switch - ATyS p, Advanced Integrated Logic, 4 Pole 2000A

AUTOMATIC TRANSFER SWITCHES

CONSTRUCTION	Version as maintenance-/service switch	Yes
	Version as safety switch	Yes
	Version as emergency stop installation	No
	Version as reversing switch	Yes
	Number of switches	2
	Suitable for front mounting 4-hole	No
	Suitable for front mounting centre	No
	Suitable for distribution board installation	No
	Suitable for intermediate mounting	Yes
	Interlockable	Yes
MECHANICAL	Padlock locking	Yes
DIMENSIONS	Height	258 mm
	Width	716 mm
	Depth	521 mm
	Weight	78.7 kg

DIMENSIONAL DIAGRAM

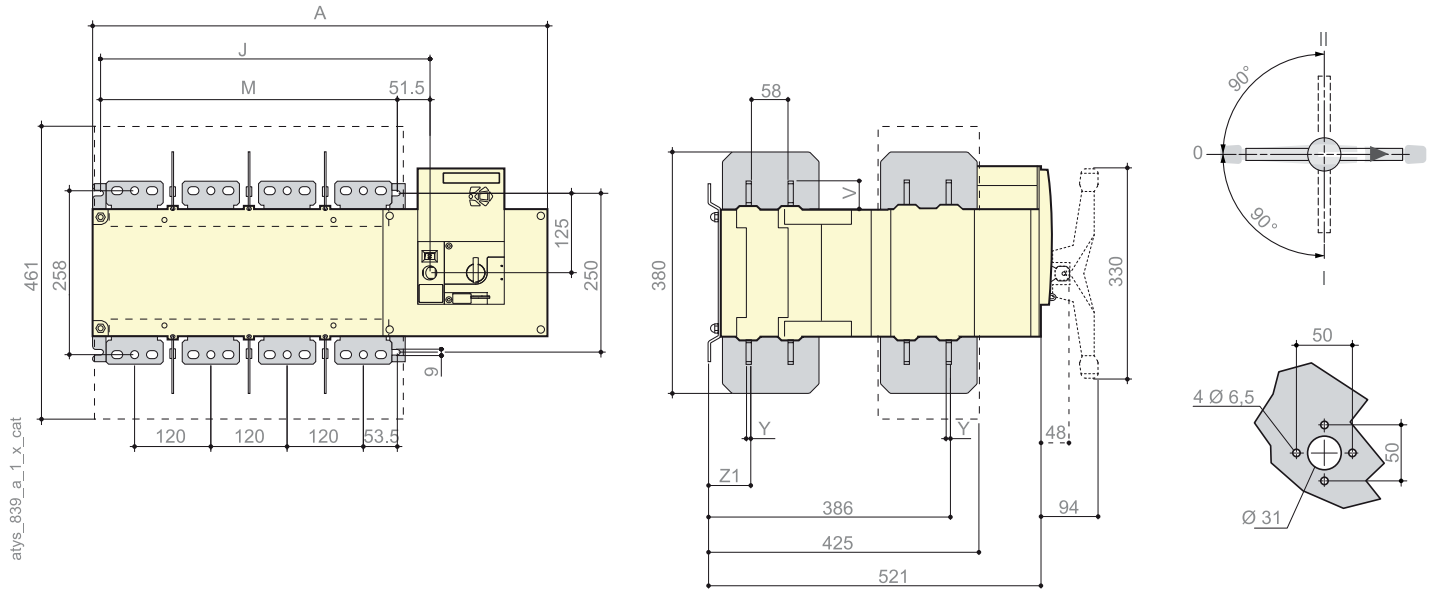

Rating (A)	Overall Dimensions	Terminal Shrouds	Switch Body				Switch Mounting		Connection						
	B	AC	A 3p.	A 4p.	J 3p.	J 4p.	M 3p.	M. 4p.	T	U	V	X	Y	Z1	AA
2000 ... 3200	380	531	596	716	399	519	347	467	120	90	44	53	8	67.5	288

Published on 04 August 2026

RELATED PRODUCTS

ACCESSORY



Item No: 15094200
Required: No
Description: Socomec ATyS/BCO/SCO/SLB Term. Screen, suits ATyS/BCO/SCO 4P 2000 - 3200A and SLB 3/4P 4000 - 5000A

Item No: 15290080
Required: No
Description: Socomec ATyS Protective Cutout Surround, suits ATyS r 800 - 3200A

Item No: 15390080
Required: No
Description: Socomec ATyS Protective Cutout Surround, suits ATyS g/p, 800 - 3200A

Item No: 15593200
Required: No
Description: Socomec ATyS Voltage Sensing Kit, suits ATyS g/p, 3 Pole 2000 - 3200A

Item No: 15594200
Required: No
Description: Socomec ATyS Voltage Sensing Kit, suits ATyS g/p, 4 Pole 2000 - 3200A



Item No: 15990532
Required: No
Description: Socomec ATyS Auxiliary Contact 1 N.O + 1 N.C, 800 - 2500A



Item No: 15992009
Required: No
Description: Socomec ATyS M/ATyS RJ45 Cable, 3m length, suits ATyS D10/20 Display

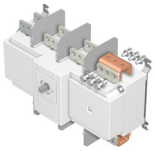

Item No: 26191200
Required: No
Description: Socomec ATyS/SCO/SLB Connection Bar - Part A, suits ATyS/SCO 2000 - 3200A and SLB 2500A (QTY 1)

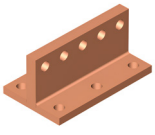

Item No: 26291200
Required: No
Description: Socomec ATyS/SCO/SLB Connection Bar - Part C, suits ATyS/SCO 2000 - 3200A and SLB 2500A (QTY 1)



Item No: 26391200
Required: No
Description: Socomec ATyS/SCO/SLB Connection Bar - Part D, suits ATyS/SCO 2000 - 3200A and SLB 2500A (QTY 1)

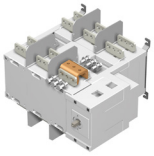

Item No: 26991200
Required: No
Description: Socomec ATyS/SCO/SLB Connection Bar - Part B, suits ATyS/SCO 2000 - 3200A and SLB 2500A (QTY 1)

Item No: 41090320
Required: No
Description: Socomec ATyS/SCO Connection Bar - Part E, 2000 - 3200A (QTY 1)



Item No: 48250090
Required: No
Description: Socomec Diris A-30/41/ ATyS P 2 Pulse Outputs Plugin Module



Item No: 48250092
Required: No
Description: Socomec Diris A-30/41/ ATyS P RS485 Modbus Communication Plugin Module



Item No: 48250093
Required: No
Description: Socomec Diris A-30/41/ ATyS P 2 Analogue Outputs 0/4-20mA Plugin Module



Item No: 48250203
Required: No
Description: Socomec Diris A-30/41/ ATyS P Ethernet (Modbus TCP) Communication Plugin Module



Item No: 48250204
Required: No
Description: Socomec Diris A-30/41 RS485 Modbus to Ethernet (Modbus TCP) Gateway Plugin module

Item No: 95095320
Required: No
Description: Socomec ATyS Motor Module, 2000 - 3200A

RELATED PRODUCTS

ACCESSORY



Item No: 95792001

Required: No

Description: Socomec ATyS Electronic module, suits ATyS p



Item No: 95992010

Required: No

Description: Socomec ATyS M/ATyS Remote Display - D10, suits ATyS pM/ATyS g, 96 x 96mm Frame



Item No: 95992020

Required: No

Description: Socomec ATyS M/ATyS Remote Display and Interface - D20, suits ATyS pM/ATyS p, 96 x 96mm Frame