95534080

Socomec ATyS Automatic Transfer Switch - ATyS g, Basic Integrated Logic, 4 Pole 800A

AUTOMATIC TRANSFER SWITCHES

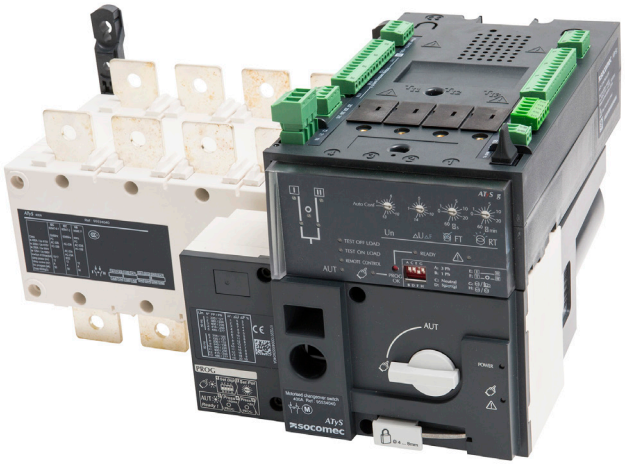

Component type	Switch disconnector
Range	ATyS Automatic
Model	N/A
Product status	Existing

The ATyS g and ATyS p are a range of 125A to 3200A automatic transfer switches enabling on-load changeover and monitoring between separate three-phase or single-phase sources, configured via potentiometers and DIP switches (ATyS g) or an integrated keypad and LCD display (ATyS p), designed for mains-mains and mains-genset applications. Optional plug-in communication and I/O modules available.

ELECTRICAL

Rated operating voltage Ue	1000 V
Max. rated operation voltage Ue AC	1000 V
Rated permanent current at AC-21, 400 V	800 A
Rated control supply voltage Us at AC 50HZ	400-690 V
Rated uninterrupted current Iu	800 A
Number of poles	4
Rated operation power at AC-23, 400 V	475 kW
Rated short-time withstand current Icw	35 kA
Type of control element	Other
Type of electrical connection of main circuit	Bolt connection
Rated operating voltage	400-690 V
Rated permanent current at AC-23, 400 V	800 A
Switching power at 400 V	6400 kW
Conditioned rated short-circuit current Iq	50 kA
Number of auxiliary contacts as normally closed contact	0
Number of auxiliary contacts as normally open contact	3
Number of auxiliary contacts as change-over contact	0
Motor drive optional	No
Motor drive integrated	Yes
Voltage release optional	No

CONSTRUCTION

Device construction	Built-in device fixed built-in technique
Colour control element	Other
Degree of protection (IP), front side	IP20
Version as main switch	Yes

Published on 04 August 2026

95534080

Socomec ATyS Automatic Transfer Switch - ATyS g, Basic Integrated Logic, 4 Pole 800A

AUTOMATIC TRANSFER SWITCHES

CONSTRUCTION	Version as maintenance-/service switch	Yes
	Version as safety switch	Yes
	Version as emergency stop installation	No
	Version as reversing switch	Yes
	Number of switches	2
	Suitable for front mounting 4-hole	No
	Suitable for front mounting centre	No
	Suitable for distribution board installation	No
	Suitable for intermediate mounting	Yes
	Interlockable	Yes
MECHANICAL	Padlock locking	Yes
DIMENSIONS	Height	306.5 mm
	Width	584 mm
	Depth	391.5 mm
	Weight	49 kg

DIMENSIONAL DIAGRAM

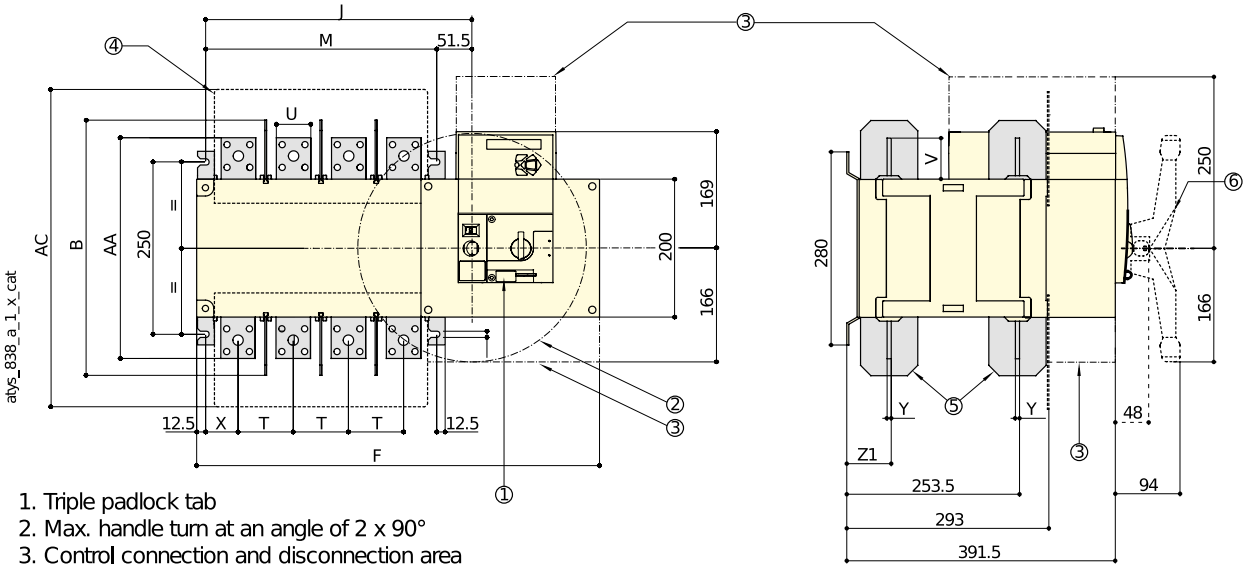

1. Triple padlock tab
2. Max. handle turn at an angle of 2 x 90°
3. Control connection and disconnection area
4. Terminal screens
5. Inter-phase screen
6. Handle

Rating (A) / Frame size	Overall dimensions	Terminal shrouds	Switch body				Switch mounting		Connection						
	B	AC	F 3p.	F 4p.	J 3p.	J 4p.	M 3p.	M 4p.	T	U	V	X	Y	Z1	AA
800 / B6	370	461	504	584	306.5	386.5	255	335	80	50	60.5	47.5	7	66.5	321
1000 / B6	370	461	504	584	306.5	386.5	255	335	80	50	60.5	47.5	7	66.5	321
1250 / B6	370	461	504	584	306.5	386.5	255	335	80	60	65	47.5	7	66.5	330
1600/B7	380	531	596	716	398.5	518.5	347	467	120	90	44	53	8	67.5	288

Published on 04 August 2026