48290556

Socomec TR-14 Split Core CT 63-160A 14 x 15mm for Digiware and DIRIS A-xx

CURRENT TRANSFORMERS AND TRANSDUCERS

socomec Innovative Power Solutions

Component type	Current transformer
Range	TR/iTR Split Core
Model	N/A
Product status	Existing

The Socomec Split Core CTs are designed for use with Diris A-40, A-200, and Digiware I modules. They are quick to install, have a wide range of nominal current and are highly accurate. Each CT is sold with a wide range of accessories to allow for flexibility in installation position within a switchboard or distribution board. The Socomec RJ12 cables are available in multiple length options.

ELECTRICAL	Primary rated current	160 A
	Secondary current on CT	0.1 A
	Rated operating frequency	50-60 Hz
	Max. operating voltage (Umax)	300 V
	Accuracy class	0.5
	Over current limiting factor	FS 10
	Secondary rated apparent power	0.1 VA
	Calibrated	Yes
CONSTRUCTION	Current transformer type	Split core
	Material housing	Plastic
	Model	Attachable current transformer
	With shock protection	Yes
	Snap mounting	Yes
	With copper rail	Yes
	Secondary connection	Plug-in connection
	Number of primary inputs	1
DIMENSIONS	Opening diameter	14 mm
	Height opening	14-14 mm
	Width opening	14-14 mm
ENVIRONMENT	Storage temperature	-25…85 °C

DIMENSIONAL DIAGRAM

Dimensions (mm)

TR-10 / TR-14 / TR-21 / TR-32

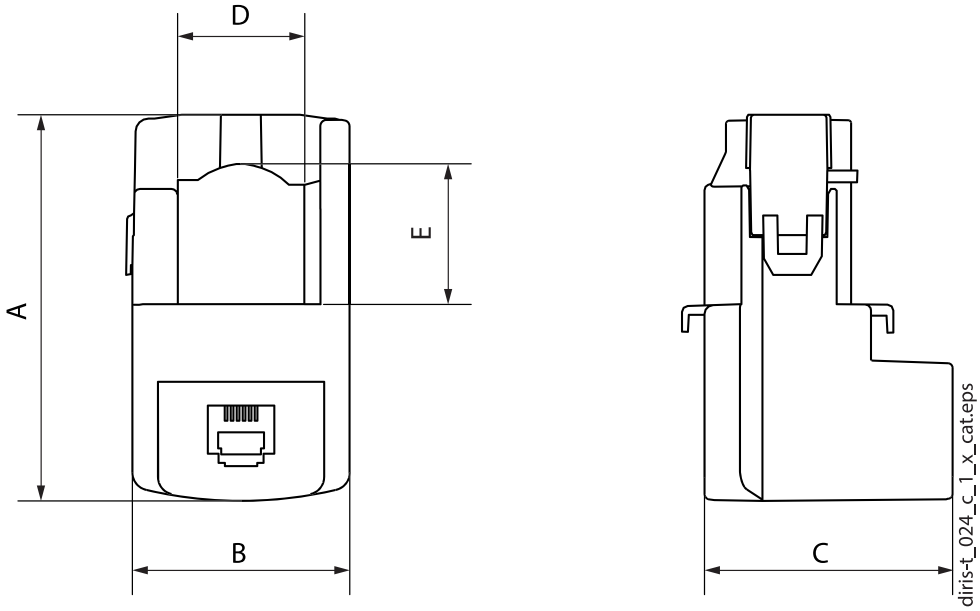

Model	Nominal current range (A)	Real range covered (A)	A (mm)	B (mm)	C (mm)	D (mm)	E (mm)	Ø (mm)
TR / iTR-10	25 ... 63	0.5 ... 75.6	44	26	28	-	-	10
TR / iTR-14	40 ... 160	0.8 ... 192	67	29	28	14	15	14
TR / iTR-21	63 ... 250	1.26 ... 300	65	37	43	21	23	21
TR / iTR-32	160 ... 600	3.2 ... 720	86	53	47	32	33	32

48290556

Socomec TR-14 Split Core CT 63-160A 14 x 15mm for Digiware and DIRIS A-xx

CURRENT TRANSFORMERS AND TRANSDUCERS

ELECTRICAL CONNECTION DIAGRAM

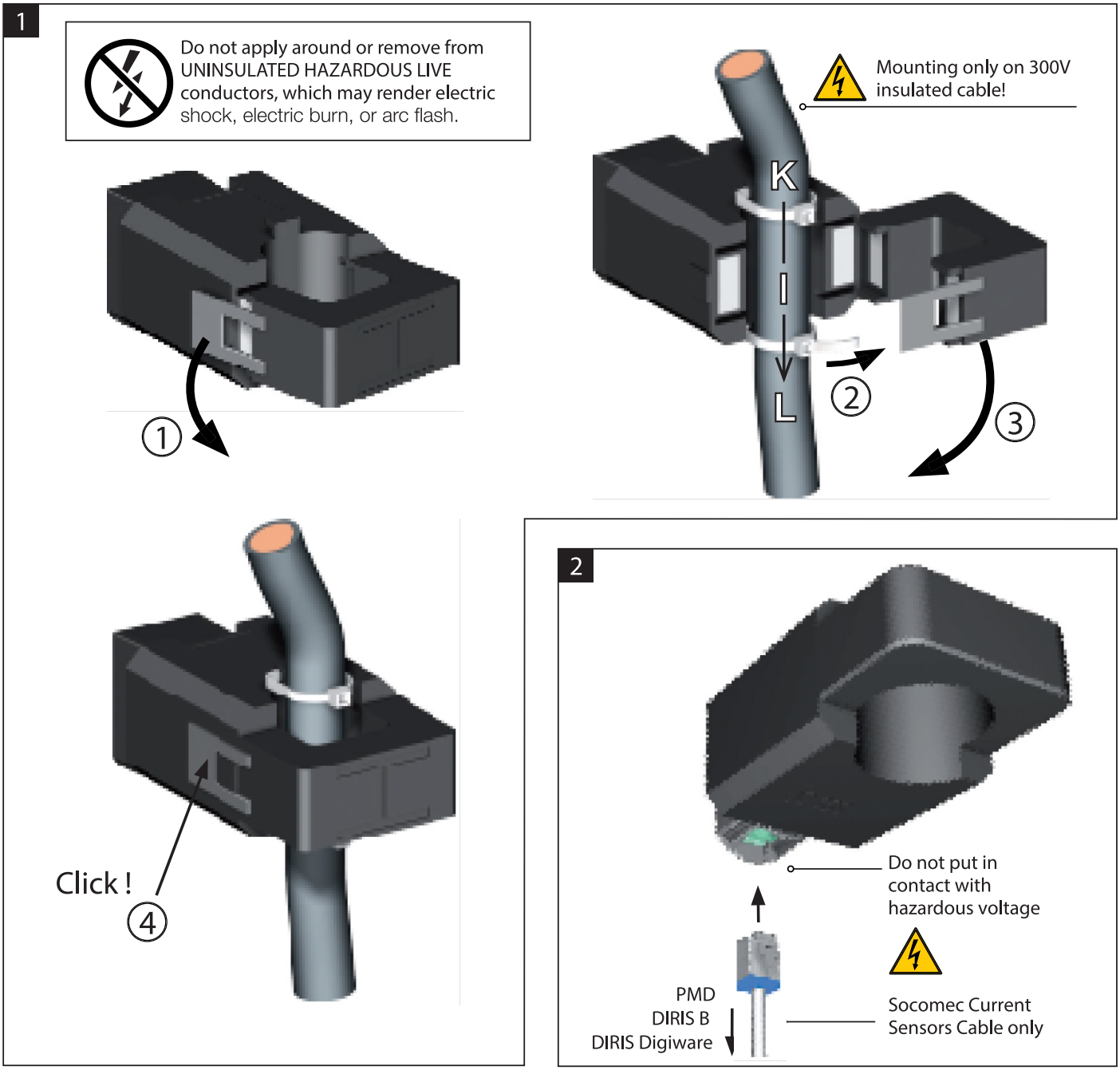

Published on 18 August 2026

RELATED PRODUCTS

ACCESSORY

Item No: 48290580
Required: No
Description: Socomec RJ12 x 3 CT to Meter Cable for Digiware and DIRIS A-xx 0.1m

Item No: 48290581
Required: No
Description: Socomec RJ12 x 3 CT to Meter Cable for Digiware and DIRIS A-xx 0.2m

Item No: 48290582
Required: No
Description: Socomec RJ12 x 3 CT to Meter Cable for Digiware and DIRIS A-xx 0.3m

Item No: 48290583
Required: No
Description: Socomec RJ12 x 3 CT to Meter Cable for Digiware and DIRIS A-xx 1m

Item No: 48290584
Required: No
Description: Socomec RJ12 x 3 CT to Meter Cable for Digiware and DIRIS A-xx 2m

Item No: 48290588
Required: No
Description: Socomec RJ12 x 4 CT to Meter Cable for Digiware and DIRIS A-xx 1m

Item No: 48290589
Required: No
Description: Socomec RJ12 x 4 CT to Meter Cable for Digiware and DIRIS A-xx 2m

Item No: 48290590
Required: No
Description: Socomec RJ12 x 6 CT to Meter Cable for Digiware and DIRIS A-xx 0.1m

Item No: 48290591
Required: No
Description: Socomec RJ12 x 6 CT to Meter Cable for Digiware and DIRIS A-xx 0.2m

Item No: 48290592
Required: No
Description: Socomec RJ12 x 6 CT to Meter Cable for Digiware and DIRIS A-xx 0.3m

Item No: 48290593
Required: No
Description: Socomec RJ12 x 6 CT to Meter Cable for Digiware and DIRIS A-xx 1m

Item No: 48290594
Required: No
Description: Socomec RJ12 x 6 CT to Meter Cable for Digiware and DIRIS A-xx 2m

Item No: 48290595
Required: No
Description: Socomec RJ12 x 3 CT to Meter Cable for Digiware and DIRIS A-xx 0.5m

Item No: 48290596
Required: No
Description: Socomec RJ12 x 4 CT to Meter Cable for Digiware and DIRIS A-xx Cable 0.5m

Item No: 48290597
Required: No
Description: Socomec RJ12 x 6 CT to Meter Cable for Digiware and DIRIS A-xx Cable 0.5m

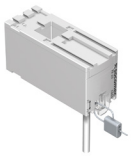

Item No: 48290600
Required: No
Description: Socomec Sealable Cover for TE/TR/iTRs/TF CTs

Item No: 48290602
Required: No
Description: Socomec RJ12 x 1 CT to Meter Cable 600V for Digiware and DIRIS A-xx 5m

Item No: 48290603
Required: No
Description: Socomec RJ12 x 1 CT to Meter Cable for Digiware and DIRIS A-xx 10m

RELATED PRODUCTS

ACCESSORY

Item No: 48290606

Required: No

Description: Socomec RJ12 x 3 CT to Meter Cable for Digiware and DIRIS A-xx 3m