48290220

Socomec Digiware M-70 Monitoring and Gateway RS485 Ethernet

MODULAR ENERGY MONITORING AND CONNECTIVITY

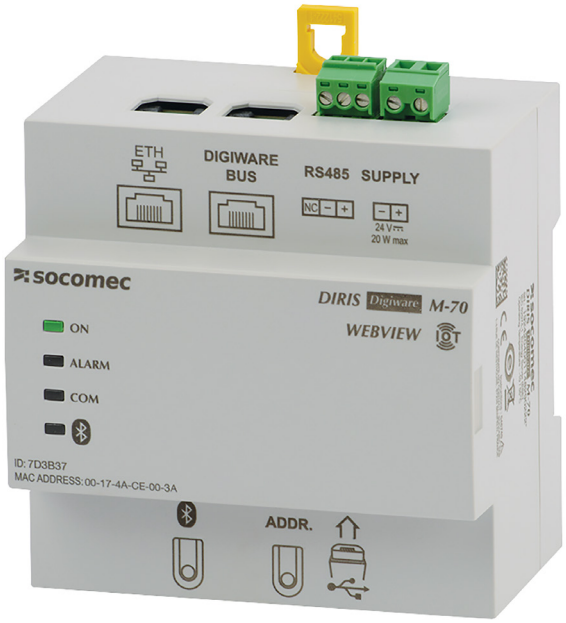

Component type	System interface/media gateway for bus system
Range	Digiware D and M
Model	N/A
Product status	New Item

The Socomec Digiware D and M energy management system and gateway modules centralise the energy, environmental and IO data within the Digiware system in an easy to access and analyse method through an embedded webserver.

ELECTRICAL	Number of channels	1
	With LED indication	Yes
	Operating voltage	0-24 V
	Voltage type	DC
	Other bus systems	None
	Radio frequent bidirectional	No
	Power consumption	2.5 W
COMMUNICATION	Protocol	TCP/IP
	Updateable	Yes
	Provider dependent	No
	Visualization	Yes
	Web-Server	Yes
	Radio interface	No
	IR interface	No
CONSTRUCTION	Model	Ethernet interface
	Mounting method	DRA (DIN-rail adapter)
	Max. number of devices per channel	32
	IP rating	IP20
	Bus system KNX	No
	Bus system KNX radio	No
	Bus system radio frequent	No
	Bus system LON	No
	Bus system Powernet	No
	Demounting protection	No
DIMENSIONS	Width in number of modular spacings	5

Published on 01 December 2025

ELECTRICAL CONNECTION DIAGRAM

DIRIS Digiware D-50/D-70 display and M-50/M-70 gateway

• RS485 master mode

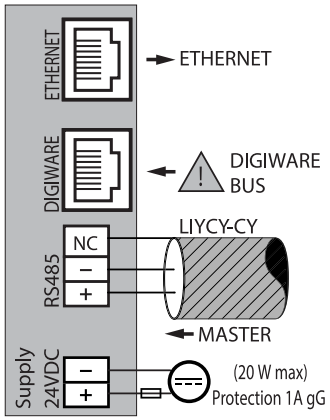

• RS485 slave mode

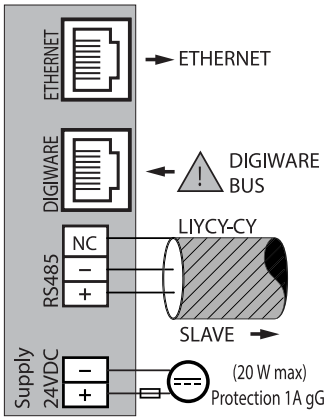

(*) The use of a 1A / 24 VDC fuse pr otection is recommended if the 24 VDC power supply is not provided by Socomec.
For North America, the use of recognized fuses is mandatory.

RELATED PRODUCTS

ACCESSORY



Item No: 48290050
Required: No
Description: Socomec USB Configuration Micro USB for Digiware and DIRIS A-xx



Item No: 48290180
Required: No
Description: Socomec RJ45 Bus Terminating Resistor for Comms and Power



Item No: 48290181
Required: No
Description: Socomec Digiware RJ45 Comms and Power Cable 0.1m



Item No: 48290182
Required: No
Description: Socomec Digiware RJ45 Comms and Power Cable 0.5m



Item No: 48290183
Required: No
Description: Socomec Digiware RJ45 Comms and Power Cable 1m



Item No: 48290184
Required: No
Description: Socomec Digiware RJ45 Comms and Power Cable 2m



Item No: 48290186
Required: No
Description: Socomec Digiware RJ45 Comms and Power Cable 5m



Item No: 48290187
Required: No
Description: Socomec Digiware RJ45 Comms and Power Cable 10m



Item No: 48290188
Required: No
Description: Socomec Digiware RJ45 Comms and Power Cable 0.2m



Item No: 48290189
Required: No
Description: Socomec Digiware RJ45 Comms and Power Cable 0.06m



Item No: 48290190
Required: No
Description: Socomec Digiware Connector RJ45 Comms and Power Cable 3m



Item No: 48290605
Required: No
Description: Socomec Digiware withdraw Connector Comms and Power Cable (Qty 10)