1718OB2

Allen-Bradley 1718 Ex I/O 2-Point Digital Output Module 23V

IN CABINET DISTRIBUTED IO



Component type	Fieldbus, decentr. periphery - analogue/digital I/O module
Range	Ex I/O
Model	N/A
Product status	Existing

The Allen-Bradley Ex I/O modules are an intrinsically safe distributed I/O platform that can be mounted in either Zone 1 or 2, Class I or Div 2 hazardous areas. It integrates devices via EtherNet/IP™ in a chassis-based I/O design reducing the need for additional hardware and wiring. Allowing flexible configuration options ranging from 10 to 40-slot and covered by bulletin numbers 1718 and 1719.

CONSTRUCTION	Suitable for safety functions	No
	Number of digital outputs	2
DIMENSIONS	Width	28 mm
	Height	107 mm
	Depth	132 mm
ENVIRONMENT	Operating temperature	-20…60 °C
	Storage temperature	-25…85 °C
	Max. ambient humidity (non-condensing)	95 %

Published on 06 October 2026

1718OB2

Allen-Bradley 1718 Ex I/O 2-Point Digital Output Module 23V

IN CABINET DISTRIBUTED IO

DIMENSIONAL DIAGRAM

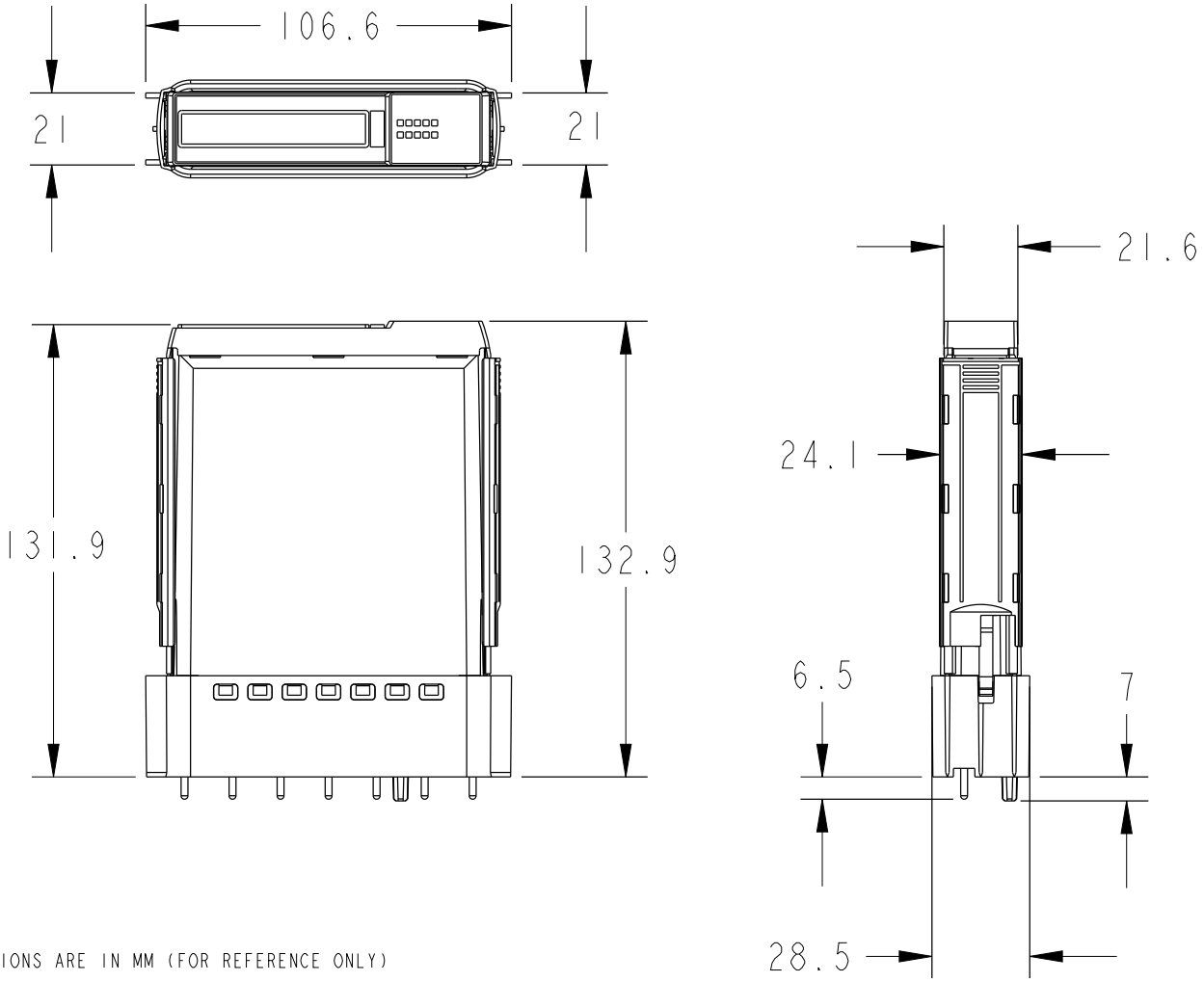

NOTE:

ALL DIMENSIONS ARE IN MM (FOR REFERENCE ONLY)

RELATED PRODUCTS

ACCESSORY



Item No: 1719TB6
Required: No
Description: Allen-Bradley 1719 Ex I/O Screw Terminal 6P



Item No: 1719TB6S
Required: No
Description: Allen-Bradley 1719 Ex I/O Spring Terminal 6P



Item No: 1719TB6F
Required: No
Description: Allen-Bradley 1719 Ex I/O Front Screw Terminal 6P



Item No: 1719TB8
Required: No
Description: Allen-Bradley 1719 Ex I/O Screw Terminal 8P

Published on 06 October 2026

RELATED PRODUCTS

ACCESSORY



Item No: 1719TB8F

Required: No

Description: Allen-Bradley 1719 Ex I/O Front Screw Terminal 8P



Item No: 1719TB8S

Required: No

Description: Allen-Bradley 1719 Ex I/O Spring Terminal 8P



Item No: 1719TB8SX2

Required: No

Description: Allen-Bradley 1719 Ex I/O Spring Terminal 2 x 8P



Item No: 1719TB8X2

Required: No

Description: Allen-Bradley 1719 Ex I/O Screw Terminal 2 x 8P

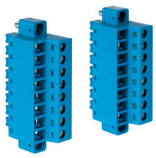

Item No: 1719TB8X2F

Required: No

Description: Allen-Bradley 1719 Ex I/O Front Screw Terminal 2 x 8P

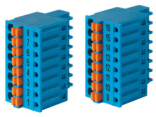

Item No: 1719TB8X2SA

Required: No

Description: Allen-Bradley 1719 Ex I/O Spring Terminal 2 x 8P for 1719-IBN8