D7PMT34PX01

Sprecher and Schuh D7 E Stop 22.5mm Complete Plastic 2 POS 30mm Operator MOM Twist to Release RD 1NC

PUSHBUTTON AND PILOT LIGHTS



Component type	Emergency stop complete
Range	D7
Model	N/A
Product status	Existing

The Sprecher + Schuh D7 line of operator control devices is a diverse range of 22.5mm mount pushbuttons, pilot lights, selector switches, and emergency stops, ideal for use in applications requiring reliable performance. Modular design allows for easy configuration and assembly. Available in plastic and metal types, optional accessories include enclosures, legend plates, padlocks, and colour caps.

ELECTRICAL	Number of contacts as normally closed contact	1
	Number of contacts as normally open contact	0
CONSTRUCTION	Material front ring	Plastic
	Colour front ring	Red
	Mounting method	Surface mounting
	IP rating	IP65/IP66/IP69K
MECHANICAL	Unlocking method	Turn-release
PHOTOMETRIC	With lighting	No
DIMENSIONS	Hole diameter	22.5 mm

Published on 02 October 2026

D7PMT34PX01

Sprecher and Schuh D7 E Stop 22.5mm Complete Plastic 2 POS 30mm Operator MOM Twist to Release RD 1NC

PUSHBUTTON AND PILOT LIGHTS

DIMENSIONAL DIAGRAM

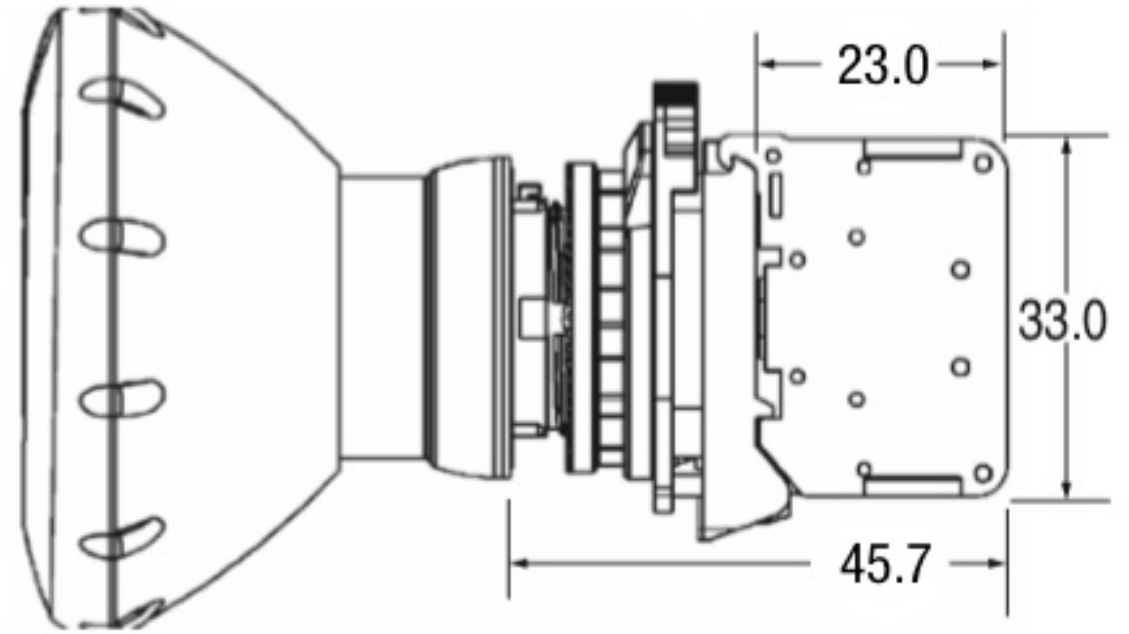

Published on 02 October 2026