CPRACC3MG

NHP Concept Premier Panelboard Accessory Module 648mm IP66 without Escutcheon Grey

Component type	Empty cabinet
Range	Concept Premier
Model	N/A
Product status	Existing

The Concept Premier Panelboard is a premium panelboard offering all the features of Concept Plus, but also includes additional features such as an IP66 rating, 3-point door locking, and a stainless steel option. The increased depth between escutcheon and door allows load break handles and locking devices to be fitted.

CONSTRUCTION	**Material housing**	Steel
	Surface protection	Powder coating
	Colour	Storm grey
	Mounting method	Surface mounted (plaster)
	Material escutcheon	Mild steel
	Material plate thickness cabinet	1.6 mm
	Material plate thickness door/cover	1.6 mm
	Type of handle	Semi-flush
	Thickness of inner plate/escutcheon	1
	IP rating	IP66
	Type of cover	Door
	Type of door	Single
	Transparent cover/door	No
	With lock	Yes
MECHANICAL	**Number of modules**	3
	Escutcheon	No
	Impact strength	IK10
DIMENSIONS	**Height**	648 mm
	Width	600 mm
	Depth	240 mm
ENVIRONMENT	**Suitable for outdoor use**	Yes

Published on 12 October 2026

CPRACC3MG

NHP Concept Premier Panelboard Accessory Module 648mm IP66 without Escutcheon Grey

DIMENSIONAL DIAGRAM

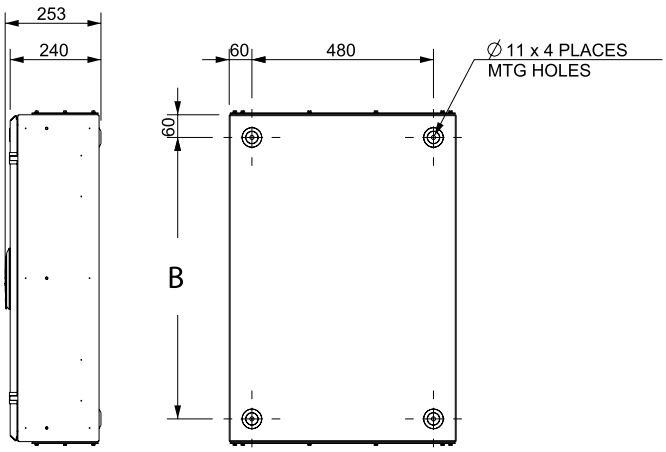

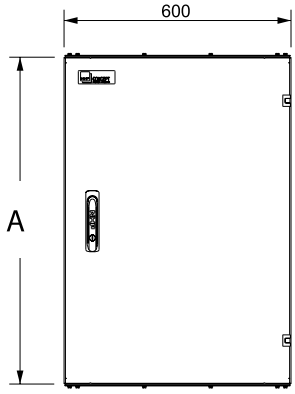

Module Size	A	B
2	432 mm	312 mm
3	648 mm	528 mm
4	864 mm	744 mm
5	1080 mm	960 mm
6	1296 mm	1176 mm
7	1512 mm	1392 mm
8	1728 mm	1608 mm
9	1944 mm	1824 mm

Plan view

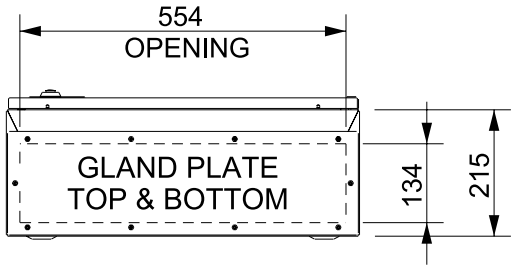

RELATED PRODUCTS

ACCESSORY

Item No: DA28400
Required: No
Description: STEGO Pressure Compensation Device Plastic M40 IP66 and X9K Qty 2

Item No: DA28420000
Required: No
Description: STEGO Pressure Compensation Device Plastic M40 IP66 Qty 1

Item No: DA28404000
Required: No
Description: STEGO Pressure Compensation Device Aluminium M12 IP67 Qty 1

Item No: DA28455
Required: No
Description: STEGO Pressure Compensation Device 303 Stainless M40 IP66 and X9K

Item No: DA28406
Required: No
Description: STEGO Pressure Compensation Device Plastic M12 IP66 and X9K Qty 2

Item No: DD084
Required: No
Description: STEGO Drainage Device Plastic IP66 and IP67 and IP69K M50

Published on 12 October 2026