Safety Solutions

Integrated, value-add solutions for increased protection of people and assets

NHP Electrical Engineering Products Pty Ltd

AUS 1300 NHP NHP
NZ 0800 NHP NHP

nhp.com.au
nhp-nz.com

In all industrial applications, failure to ensure the protection of employees, the general population and critical assets puts you and your business at high risk. Are you as safe as you should be?

Understanding Machine Safety and the importance of getting it right

Machine safety deals with providing measures for protection of personnel from the hazards generated by machines in a manufacturing environment. The machine safety standards have gradually evolved over the last number of years to include requirements for increased diagnostic capabilities and improved reliability of the components in your safety system.

There has also been an increased focus on achieving compliance with legislation. This, combined with the alignment of Australian and New Zealand local standards to international standards has resulted in increased challenges.

With the advance of safety technologies, increased productivity has become synonymous with increased safety functionality. Through implementing an integrated safety strategy utilising the latest technologies, plants have the ability to not only reduce injuries but provide significant improvements in manufacturing productivity and asset efficiency through increased machine uptime.

NHP are your trusted partner when it comes to Machine Safety. At NHP we pride ourselves on offering a comprehensive suite of safety products that meet all relevant local and international standards. In addition, all of our products are fully supported by a dedicated team of specialists who can help you design and implement an integrated value-add safety solution.

NHP Safety Specialists

NHP are specialists in safety products covering a broad spectrum of industry applications. Strengthening this value-add team and highlighting our commitment to safety, NHP have also made significant investment in ensuring we have TÜV certified Functional Safety Engineers to complement this range.

TÜV Rheinland is the leading international body for the certification of safety and quality of products, services and management systems and these certified team members perfectly complement our extensive range of TÜV certified products.

NHP expertise is available to assist you with Risk Assessments, consultation, design and validation of safety systems as well as post-sales technical support. Our safety experts can also provide in-depth training on safety standards, which can be tailored to suit your specific application requirements.

Safety Products Overview

Through our partnership with Rockwell Automation, NHP can provide world class automation solutions that promise to meet or exceed Machine Builder requirements. Complemented by our broad portfolio of products, NHP with Rockwell Automation can help you to design, develop and deliver a complete solution for your manufacturing and process applications.

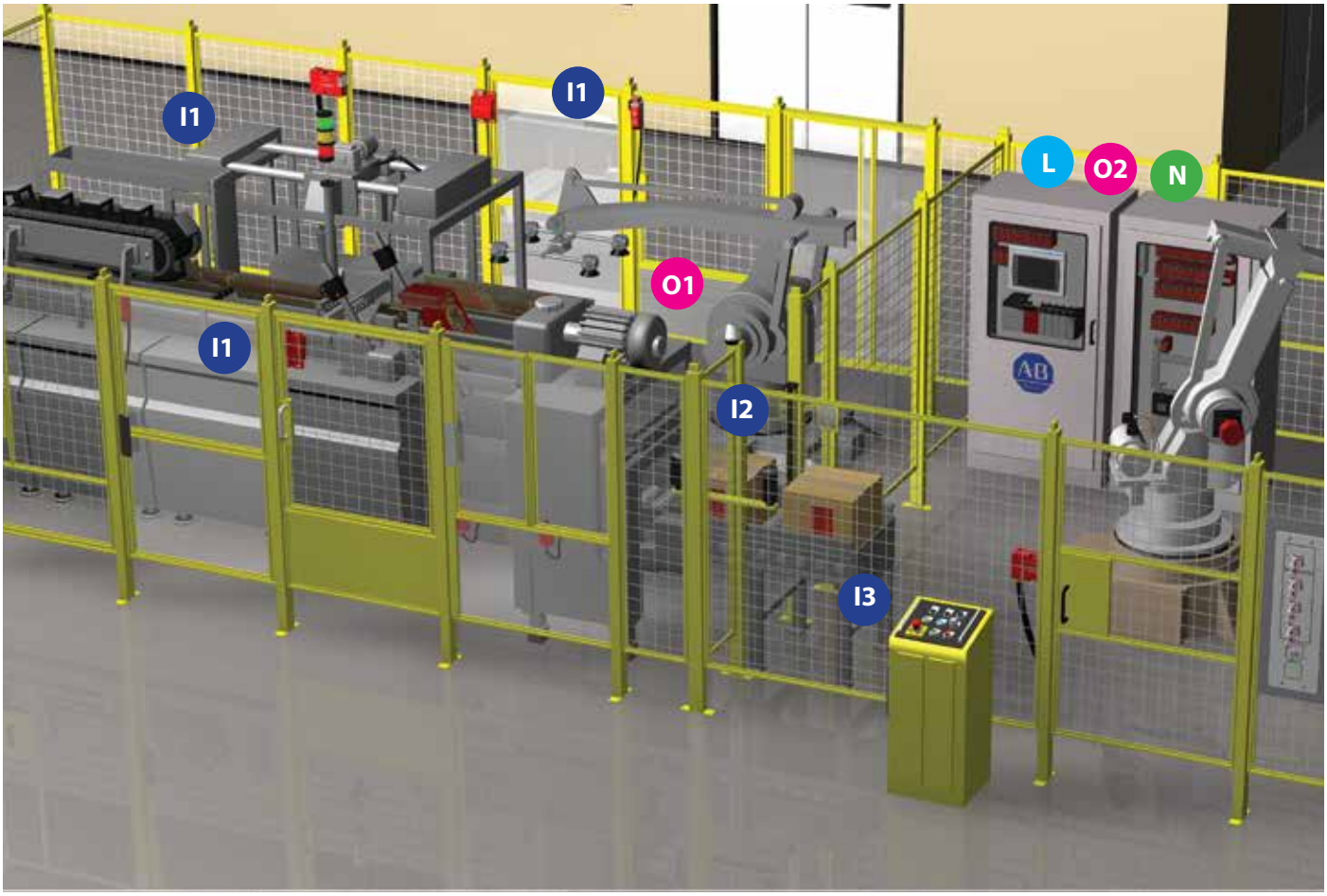

NHP offers the largest range of safety solutions in the market. With our extensive range of products, we can provide you with the complete range of solutions for your specific safety needs.

Input Devices (I)

I1 – Safety Interlock Switches

I2 – Laser Scanners & Light Curtains (Presence Sensing Devices)

I3 – Emergency Stop Devices (Emergency Stop Operators and Pull-wire switches)

Logic Devices (L)

- Single Function Safety Relays
- Software Configurable Safety Relays
- Safety PLCs (Integrated Standard, Safety and Motion Control)
- Distributed Safety I/O (In-cabinet and on-machine options)

Output Devices (O)

O1 – Output Switching Devices (Safety Contactors & Control Relays)

O2 – Safety Drives (AC Drives & Servo Drives with Safe-Torque Off)

Networks (N)

Ethernet Switches

Network Radios

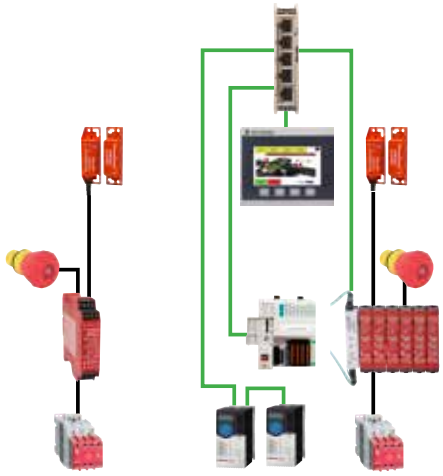

Basic Safety System

The simplicity of a Basic Safety Control System is centred on the protection functions built in to your GuardMaster® GSR Safety Relay. A basic safety system is the most economical solution for smaller machines where a single dedicated logic device is sufficient to complete the safety function. The input (eg. Safety Interlock Switches, Emergency Stop Switches, Light Curtains, Laser Scanners) and output (eg Safety Contactors, Safety Control Relays) are hard-wired to the Safety Relay without having to perform any additional configuration.

The patented single-wire safety expansion feature allows both an increase in I/O and zone control functionality, if required, with simple AND/OR logic capabilities ensuring the system is tailored to your needs. Integrating your basic safety system into your plant-wide control system is made easy, with an EtherNet/IP Network Interface available to enable real-time monitoring and diagnostics.

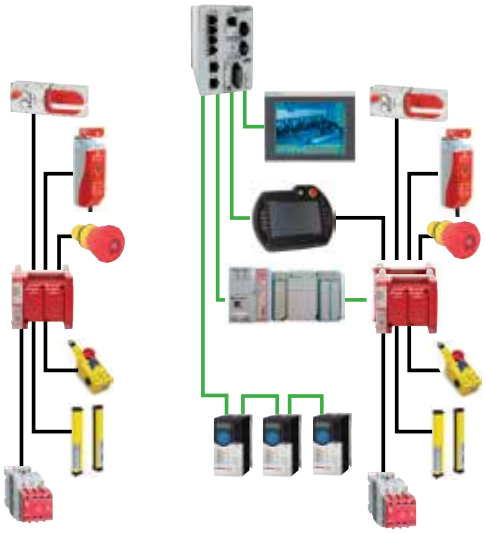

Intermediate Safety System

Where your safety needs are more comprehensive the appropriate solution may utilise a Configurable Safety Relay such as the GuardMaster® 440C-CR30. For a safety system that requires monitoring and control of increased I/O, the flexibility of highly configurable safety functions or a greater number of segregated zones, take full control with the intermediate safety system.

While the input and output safety devices that make up the intermediate system are the same as those which feature in a basic safety system, the power and flexibility of this solution comes from the GuardMaster® 440C-CR30 combined with the Connected Components Workbench (CCW) software. Tailor the operation of your system using simple, certified safety function blocks embedded into CCW, the same free software package that programs Micro800 controllers, PanelView 800 HMIs and configures PowerFlex drives. An optional Ethernet plug-in module allows the Guardmaster 440C-CR30 to easily communicate diagnostic data to an Allen-Bradley Logix™ or Micro800® controller.

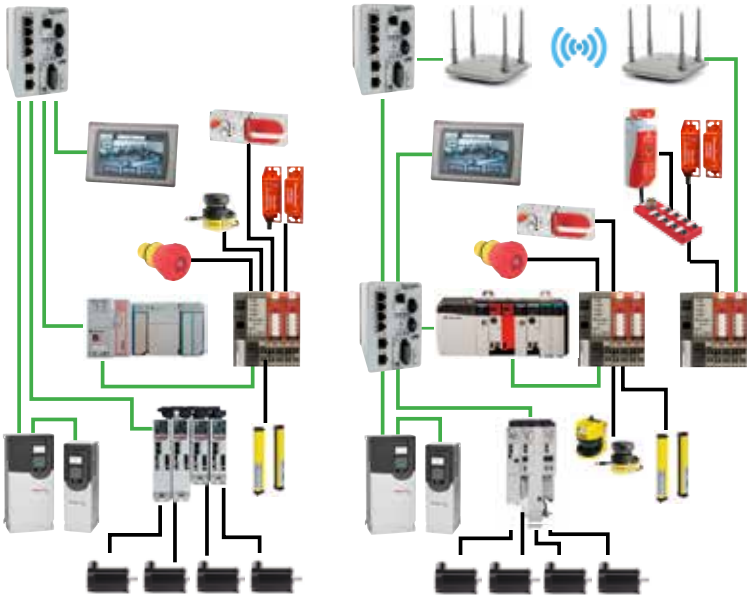

Advanced Safety System

For an advanced safety automation system offering flexibility and unparalleled integration with plant-wide information system, harness the capability of a Safety Programmable Logic Controller (PLC). With an advanced safety system you will realise the full potential of your existing EtherNet/IP™ infrastructure, utilising a single network for all aspects of your control and safety system.

With a Compact GuardLogix™ or GuardLogix™ processor as the heart of your control system, you are provided with the performance needed to add both integrated motion and integrated safety capabilities over the same standard, unmodified EtherNet/IP™ network used for discrete, batch and process control. CIP Safety™ (Safety over EtherNet/IP) provides fail-safe communication between controllers and field devices such as GuardLogix™ PLCs, distributed Safety I/O, and PowerFlex and Kinetix drives.

Inputs

The role of the primary inputs in any safety system is to restrict, prevent and/or detect access to the hazard. These devices will monitor machine or manufacturing process access points, and when an unsafe circumstance is detected the Logic device will take action to create a safe state. Such unsafe circumstances may include the removal or opening of a guard, or personnel accessing a protected area. The primary input devices can broadly be categorised as either Interlock Devices or Presence Sensing Devices. While emergency stop operators and systems play an important role within a safety control system, they are regarded as complementary protective measures rather than direct protective systems.

Safety Interlock Switches

Guardmaster® Safety Interlock Switches help protect personnel and equipment by providing physical interlocking of guard doors and equipment, allowing access to potentially hazardous areas only when the area is safe. Our range of Safety Interlock Switches provides a complete state of the art range of solutions for Mechanical Interlocks, Magnetic Interlocks and Trapped Key Switches. Our range of specialised solutions includes products such as IP69k rated devices for high hygiene requirements in the Food and Beverage industry; and RFID coded interlock switches. RFID coded interlock switches provide increased safety and improved temper-resistance. These switches combine microprocessor technology with an RFID coded actuator and are TÜV certified to PLe, Cat. 4 which is the highest level of safety for guard door position and lock monitoring.

Presence Sensing Safety Devices

Guardmaster® Presence Sensing devices are used in applications where physical guards are not practicable, or where personnel need frequent and yet safe access to an area with a potential hazard. This type of safety device helps protect personnel and equipment by detecting the presence of people and objects within a guarded area around machinery. Typical examples are near robotic welding, machining centers, stamping, hydraulic presses, filter presses or packaging equipment. The primary devices include Safe4 range of Safety Light Curtains and SafeZone Safety Laser Scanners. In addition, our range has a complete Safety Mat and Safety Edge product solution.

Emergency Stop Safety Switches

Allen-Bradley® Emergency Stop Operators and Lifeline safety pull-wire switches help ensure safe working conditions for personnel. These critical components provide high quality and reliability for your machine safety applications. Allen-Bradley® Emergency Stop Operators have plastic / metal, illuminated / non-illuminated options and enclosed versions; these operators can provide increased safety through patented self-monitoring contact block. Lifeline Pull-wire switches are also available in a stainless steel version with IP69k enclosure rating, suitable for applications with strict hygiene requirements in the Food and Beverage industry.

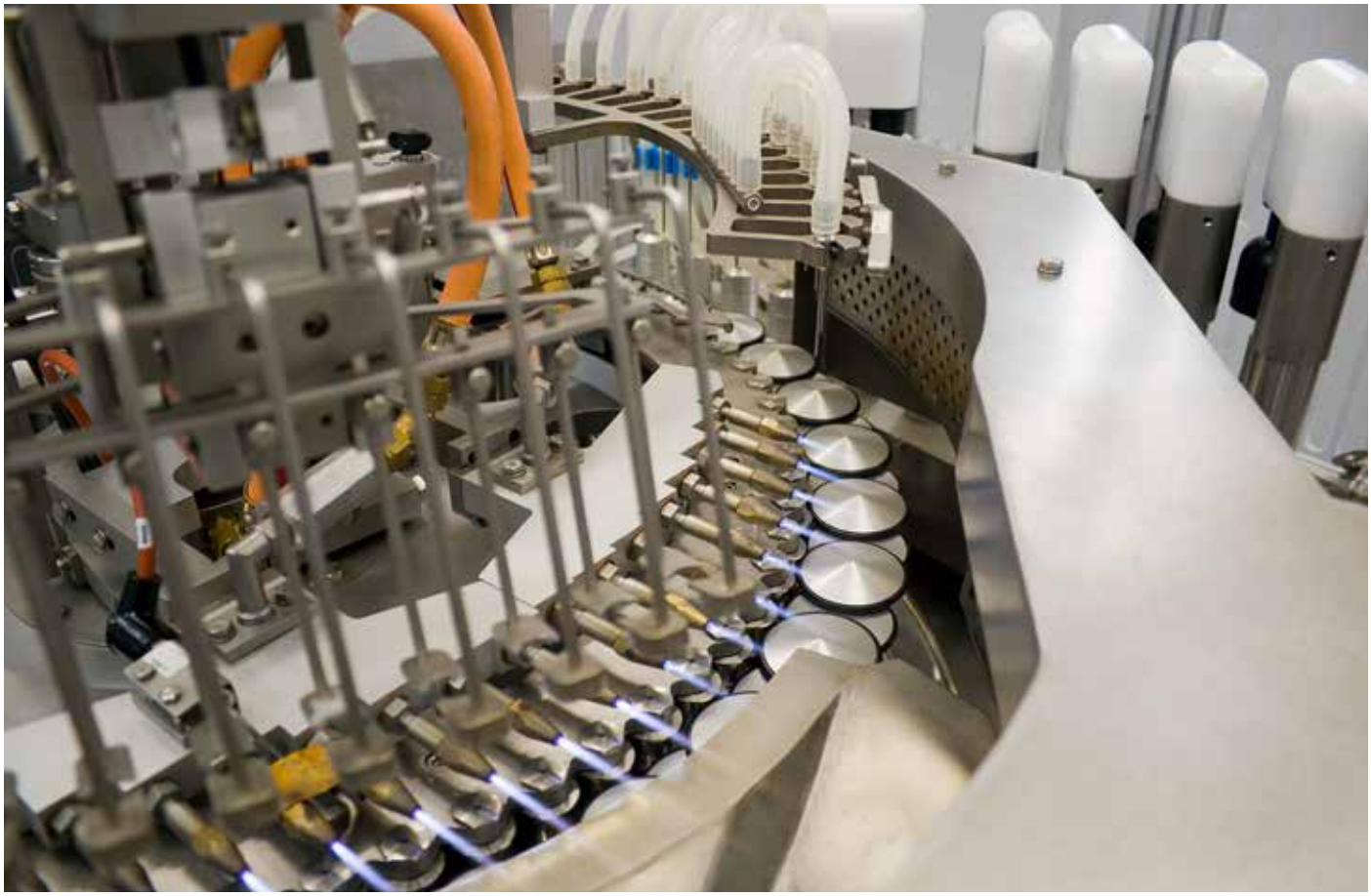

Logic

No matter what the complexity and the functionality required from your safety solution, the logic device plays a central role in keeping your workforce safe. Logic devices perform the checking and monitoring of the safety system inputs and either allow the machine to run or execute commands to stop the machine. Small hardwired monitoring safety relays are most economical for smaller machines where a dedicated logic device is sufficient to complete the safety function. Configurable monitoring safety relays are preferred where a large and diverse number of safeguarding devices are required over a small number of zones. Medium to large, or more complex machines may find Safety PLC systems with distributed I/O to be the most suitable option.

Guardmaster GSR Single Function Safety Relays

Guardmaster® GSR Safety Relays provide the basic logic solution for monitoring a safety system. GSR Safety Relays can monitor a broad range of safety input and output devices in a variety of applications and provide versatility through simple logic, reset and timing configurations. A single wire safety connection can be used to expand and cascade multiple relays. In addition, the expansion module can be used to increase the number of inputs / output devices. The GSR can share information with the control system through the optional EtherNet/IP plug in module.

Guardmaster 440C-CR30 Software Configurable Safety Relays

The Guardmaster® 440C-CR30 Software Configurable Safety Relay provides increased functionality from the GSR safety relays, due to the higher I/O and more advanced functionality which is easily configurable. These relays are ideal for applications requiring 4 to 9 safety circuits and control of up to 5 zones. You can configure this relay by selecting certified safety function blocks to rapidly build your applications. The 440C-CR30 Relays can support up to two standard plug-in modules. These modules provide additional I/O that can be used for standard signals in the safety circuit – such reset, feedback monitoring, muting sensors and auxiliary outputs, thus saving the safety I/O for signals that actually require a safety rating. The 440C-CR30 relay can share information with the control system through the optional EtherNet/IP plug in module.

Guardlogix Safety PLCs

GuardLogix® and Compact GuardLogix® Safety Controllers provide the highest level of performance, convenience and versatility for your safety control system design. This is achieved by incorporating certified Safety instructions (up to SIL 3, PLe, CAT 4) into the same control system as your standard and motion control. Using Studio5000® as your single design environment for all aspects of your control system, the creation and validation of your safety rated automation project has never been so simple. Utilising a single unmodified EtherNet/IP™ network to facilitate standard, safety and motion control instructions offers savings in time and money from the design stage, right through to commissioning. In addition to this, GuardLogix® Safety controllers offer seamless connectivity to plant-wide information systems and enables better visibility to data across your plant floor.

Distributed I/O

For any Advanced Safety System, the ability to customise, expand and modify your distributed I/O is key to the smooth design and deployment of your network architecture. With CIP Safety™ communications capabilities built in to the distributed I/O network adapter, you can place your I/O where you need it, cutting down on wiring time and achieving a faster time to market. For in-cabinet distributed safety I/O applications, POINT Guard I/O modules offer the ability to mix both safety and standard I/O in the one maximum density POINT I/O rack. For applications where On-Machine I/O would be better suited, the IP65-rated ArmorBlock® Guard I/O can be direct-mounted while providing protection from dust and moisture ingress. The ArmorBlock Guard On-Machine distributed I/O system also offers the convenience of quick-disconnect cabling, ensuring that expansions or modifications can be performed while preserving machine uptime.

Outputs

For some basic applications, removing the power to a machine may be deemed the most appropriate way to achieve a safe state. In these cases Safety Contactors and Control Relays provide a reliable, monitored method of ensuring that the hazardous process is isolated successfully and remains in that state. A more sophisticated method may be Safe-Torque Off (STO), a safety feature integrated in to PowerFlex AC Drives and Kinetix Servo drives. When STO is initiated, a safe state is achieved by removing power to the motor without disconnecting power to the drive. This can extend the life of the drive by reducing electrical wear caused by power cycling, and allows production to be restarted faster by avoiding lengthy starting sequences. Utilising STO may also reduce the size and complexity of the safety system, with savings on external hardware and labour.

Safety Contactors

Safety contactors are protected against unintended operation and the auxiliary contacts cannot be removed. Allen-Bradley safety contactors feature positively guided contacts, which are required in feedback circuits for modern safety applications. In addition, optional bifurcated auxiliary contacts are ideal for low energy feedback safety circuits where high contact reliability is required. Further, the red housing allows for easy identification to maintenance personnel.

Allen-Bradley Safety control relays are ideally suited for low-energy applications or feedback control circuits with multiple series connected N/C auxiliary contacts.

AC & Servo Drives

Hardwired Safe Torque-Off Solutions

This solution requires less panel space than non-STO options because there are fewer pieces of hardware. Panel space can be reduced by as much as 75%. As a result, installation time can be significantly reduced and therefore reduce labour costs. System reliability also improves are a result of less pieces in the installation.

With this option diagnostics become available. The drive can distinguish between a drive or application related fault versus a safety function related fault. This can significantly reduce troubleshooting time versus non-STO options.

Networked Safe Torque-Off Solutions

With this option, Safety resides in the controller and delivered via EtherNet/IP. Panel space is further reduced providing the lowest parts count solution. This further reduces installation and wiring time required. This is also the most reliable system as a result of the lowest system parts count.

This solution can be configured entirely within Studio5000 with no additional software required, so you can remove the need for any additional configuration tools to deploy your safety system.

Thanks to safety over the network, you now get an advanced level of diagnostics. Specific information is provided regarding which component faulted/experienced safety demand and why.

Note: STO does not provide electrical isolation. The supply to the drive must be disconnected by an approved isolation device before gaining access to power connections

Red = Power wiring

Green = communication wiring

Blue = I/O wiring

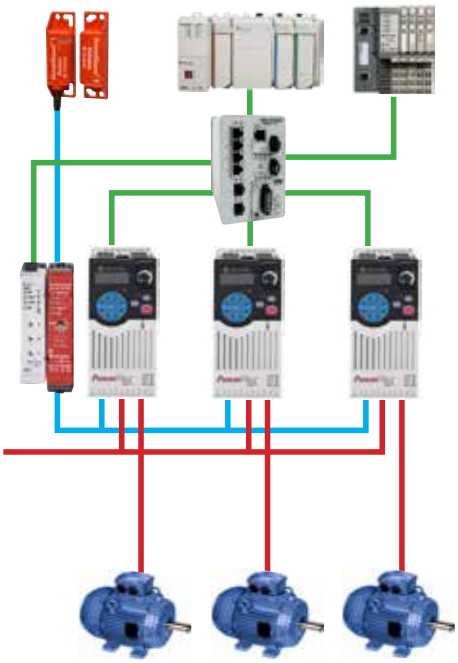

Hardwired Safe Torque-Off

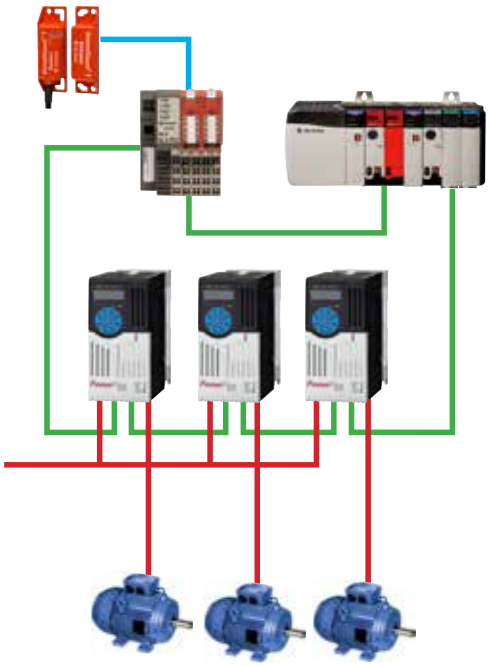

Networked Safe Torque-Off

Networks

Your EtherNet/IP™ network provides plant-wide network communication capabilities using an open, industry-standard networking protocol. It enables real-time control and high-level monitoring for any automation system – whether your application is discrete or process control, Stratix™ network hardware will suit all standard, safety, motion, or high availability applications. The Stratix™ family of Ethernet switches can transmit your Safety Instructions over copper or optic fiber, and provide options in multiple form factors, whether it is DIN-rail mount, On-Machine or 19" rack mount.

Ethernet Switches

Your EtherNet/IP™ network provides plant-wide network communication capabilities using an open, industry-standard networking protocol. It enables real-time control and high-level monitoring for any automation system – whether your application is discrete or process control, our Ethernet switches network hardware will suit all standard, safety, motion, or high availability applications. Our Ethernet switches can transmit your Safety Instructions over copper or optic fiber, and provide options in multiple form factors, whether it is DIN-rail mount, On-Machine or 19" rack mount. NHP provides a full line of industrial wireless, frequency hopping and 802.11 industrial hotspot radios product suite to perform safety functions without the need of cable installation.

Network Radios (Wireless Safety)

Integrated CIP™ Safety architectures further expand the ability to perform safety functions without the need to install cables. Whether you require Integrated Safety on moving machinery or running cable is not feasible - NHP provides a full line of industrial wireless products, accessories and technical expertise to assist you with your wireless safety architectures. Available technologies include 802.11 Fast Industrial Hotspots and Frequency Hopping Radios.

Services

Whether your safety system is limited to a single machine or encompasses your entire plant floor - understanding your safety responsibilities can seem like an insurmountable task. NHP has a dedicated safety team of TÜV Certified Functional Safety Engineers to assist end users, integrators and OEM's with their safety needs – from pre-design to system commissioning. With a complete range of safety services on offer, let NHP be your partner in safety.

Assessments:

Safety assessments help you comply with current and emerging standards by providing consulting services for safety critical controls. Once a safety assessment is complete, you are provided with complete documentation and remediation suggestions. Safety assessment services include:

- Risk
- Hazard
- Lockout/Tagout
- Safety Circuit Analysis

Validation

Safety system validation services help to ensure proper safety system installation and functionality by evaluating circuit performance, fault tolerance, fault action, software logic, device application, device function and reset actions for all modes of operation. Safety validation services include:

- Safety circuit analysis
- Machine stop time services
- Conformance audits

Training

Ensuring your company and staff are equipped with the latest news, information and standards in the safety industry, NHP holds regular half and full-day safety workshops on a range of safety topics. Courses can range from machine safety standards and legislation to the design of machine safety systems, risk assessments and even an introduction into TÜV certification.

To find out how NHP can help you provide a more profitable, safer, and sustainable operation call us on 1300 NHP NHP (1300 647 647) or contact your local representative.

Why Choose NHP

NHP has a long history in the safety industry and is a trusted destination for all your safety application needs. We have the broadest portfolio of state-of-the-art safety products on the market, with focus on usability, flexibility and calling upon our dedicated safety and automation team that includes Functional Safety Engineers (TÜV Rheinland certified), we can also offer a range of services and training opportunities to meet all your safety needs. NHP also offer a comprehensive set of selection and configuration tools that provide ease of use, reusability and shorter development times for designing the systems.

Safety Reference Guide

Complete with technical information on NHP's extensive range of safety products, whitepapers on various safety applications and information documents on local and international safety standards, the NHP Safety Reference Guide forms an invaluable resource for projects across all industries.

Safety Automation Builder

Safety Automation Builder is a free software tool to help simplify machine safety design and validation. Through streamlining safety system design, implementation and validation it helps you improve compliance and reduce costs. This software helps by guiding you through the development of your safety system, including safety system layout, product selection, and safety analysis to help you meet machinery safety Performance Level (PL) requirements as outlined by global standard (EN) ISO 13849-1.

NHP's Official Safety Blog

The NHP Safety Blog creates an opportunity for many people involved in the machine safety industry to share their opinions and perspectives on industrial safety topics as well as receive expert commentary from NHP's Safety specialists. Discussions cover various machine safety topics including safety design, safety legislation, safety standards, risk assessment and much more.

Combining in-house safety experts and products from leading global suppliers, NHP is your one stop shop for integrated, value-add Machine safety solutions.

AUSTRALIA
nhp.com.au

SALES 1300 NHP NHP

sales@nhp.com.au

NEW ZEALAND
nhp-nz.com

SALES 0800 NHP NHP

sales@nhp-nz.com

NHP Electrical Engineering Products Pty Ltd
A.B.N. 84 004 304 812

NSSC 9/16

Environmentally Friendly
Printed on recycled paper

For more information, scan to download the NHP eCatalogues App offering exclusive video content, catalogues and literature